（此页不制作）

文件信息			
产品系列	轻商固定拖	文件编号	30240301005098
文件名称	固定拖说明书（R32） 中性	版本	V1.4
印刷说明			
技术要求	1）材质：100g 双胶纸； 2）纸张：A5（210×148.5mm）； 3）印刷：黑白； 4）环保：符合 RoHS、REACH 指令要求		
备注	1）纸张数量：82张（41页）		
更改记录			
序号	更改时间	更改点	备注
1	20250723	故障代码、升压板参数、接线图更新	
2	20250805	更新附件、增加内机安装图	
3	20250822	附件增加PG16防水接头、去掉Deye	
4	20251008	更新接线图	
5	20251111	增加Annex DD内容	

Multi-Split Type Air Conditioners



IMPORTANT NOTE:
Read this manual carefully before installing or operating your new air conditioning unit. Make sure to save this manual for future reference.

CE CB

Contents

1 Safety Precautions 1

2 Parts Overview 12
Overview - Indoor Unit Display 13
Display Code Meanings 14
Accessories 15

3 Operating Instructions 16
Manual Operation(without remote) 17
Airflow Directional Control 18
Basic Operation Modes 19
Special Functions 20

4 Care and Maintenance 22
Cleaning the Unit 23

5 Installation Diagram & Line Set Specifications 24

6 Indoor Unit Installation 28

7 Outdoor Unit Installation 37

8 Insta llation of Solar Photovoltaic Modules 54

9 Electrical connect 65

10 Electrical and Gas Leak Checks 69

11 Test Run 70

12 Operation 72

1.Safety Precautions

Read Before Using

Incorrect usage may cause serious damage or injury The symbols below are used throughout this manual to indicate instructions that should be followed closely or actions that should be avoided to prevent death, injury,and/or property damage.



This symbol indicates that you should NEVER perform the indicated action.



This symbol indicates ignoring instructions may cause bodily injury, damage to the unit, or other surrounding property.



This symbol indicates that you should NEVER perform the indicated action.



Freezing and frost bite, beware escaping refrigerant and take preventative measures



High voltage or Electric Shock. Make certain that all electrical circuits are not energized



Explosion risk, High pressure gasses used in testing and operatIon



High pressure gas bottle



Caution risk of electric shock

⚠ WARNING

DISCLAIMER:You are assuming risk by handling materials containing refrigerants under pressure, that if not handled properly can cause bodily injury. If you do not feel comfortable performing this installation process, we recommend you retain the services of a qualified HVAC professional.

*****ELECTRICAL WORK MUST BE COMPLETED BY A QUALIFIED ELECTRICAL TECHNICIAN******

- ∅ ***DO NOT*** **share the electrical circuit with other appliances.You must use an independent power supply.An improper or insufficient power supply could cause fire or electrical shock.**
- ∅ ***DO NOT*** **allow any substances or gases to enter the unit when connecting the refrigerant piping.The presence of other gases or substances will lower the unit's capacity, and may cause abnormally high pressure during the operation cycle.This could cause an explosion and/or injury.**
- ∅ ***DO NOT*** **allow children to play with the air conditioner. Children should be supervised around the unit at all times.**
- ∅ **DO NOT insert your fingers，rods，or other objects into the air inlet or outlet . The fan within the unit could be rotating at high speeds and could cause injury.**
- ∅ **DO NOT use flammable sprays such as hair spray, lacquer, or paint near the unit.These could cause fire and/or an explosion.**
- ∅ ***DO NOT*** **insert your fingers，rods，or other objects into the air inlet or outlet . The fan within the unit could be rotating at high speeds and could cause injury.**
- ∅ ***DO NOT*** **use flammable sprays such as hair spray, lacquer, or paint near the unit.These could cause fire and/or an explosion.**
- ∅ ***DO NOT*** **operate the unit in places where it could be exposed to or near combustible gas. Emitted gas could collect around the unit and cause an explosion.**
- ∅ ***DO NOT*** **operate the unit in a room where it could be exposed to excessive amounts of water (such as a bathroom or laundry room). Too much exposure to water can cause electrical components to short circuit.**

Safety Precautions

- ⊘ ***DO NOT*** **insert your fingers, rods, or other objects into the air inlet or outlet . The fan within the unit could be rotating at high speeds and could cause injury.**
- ⊘ ***DO NOT*** **use flammable sprays such as hair spray, lacquer, or paint near the unit.These could cause fire and/or an explosion.**
- ⊘ ***DO NOT*** **operate the unit in places where it could be exposed to or near combustible gas. Emitted gas could collect around the unit and cause an explosion.**
- ⊘ ***DO NOT*** **operate the unit in a room where it could be exposed to excessive amounts of water (such as a bathroom or laundry room). Too much exposure to water can cause electrical components to short circuit.**
- ⊘ ***DO NOT*** **expose your skin or body directly to the cool air coming from the unit fora prolonged period of time.**
- ⊘ ***DO NOT*** **install the unit within 3 ft (1 m) of any combustible gas if the unit is equipped with an auxiliary heater.**
- ⊘ ***DO NOT*** **operate the air conditioner with wet hands.This could cause electrical shock.**
- ⊘ ***DO NOT*** **turn on the power until the installation has been completed.**

⚠ WARNING

1. Installation must be performed according to the installation instructions. Improper installation could cause water leakage, electrical shock, fire, and could void the warranty.
2. If the unit operates abnormally (emits strange noises or a burning a smell), immediately turn off the unit and disconnect the power in order to avoid electric shock, fire, and/or injury. Call your local dealer, for further assistance
3. De-commissioning and disposal of this unit must be performed by a certified technician in accordance with the Australian and New Zealand Refrigerant Handling code of practice.
4. Only use the included accessories and specified parts for installation. Using non-standard parts can cause water leakage,electrical shock,fire,and may cause the unit to fail.
5. Install the unit in a firm, stable location that can support its weight. If the installation location cannot support the weight of the unit, it could fall and cause serious injury and/or damage.
6. Appropriate wiring standards, regulations, and the installation manual must be followed for all electrical work.
7. If connecting power to fixed wiring, the following must be incorporated within it, in accordance with the wiring rules; an all-pole disconnection device (which has at least 3 mm of clearances in all poles), and have a leakage current that may exceed 10 mA, the residual current device (RCD) having a rated residual operating current not exceeding 30 mA, all must be present.
8. For all electrical work, fuse the specified cables. Connect cables tightly and clamp them securely to prevent external forces from damaging the terminal. Improper electrical connectionscould overheat, causing fire and/or electrical shock.

Safety Precautions

9. All wiring must be properly arranged to ensure that the control board cover can close properly. If the control board cover is not closed properly, it can lead to corrosion, which can cause the connection points on the terminal to overheat, which could result in fire and/or electric shock.

10. In certain functional environments (such as kitchens and server rooms etc.), the use of specially designed air-conditioning units is highly recommended.

11. If the supply cord is damaged, it must be replaced by the manufacturer, its service agent, or a similarly qualified person in order to avoid a hazard.

12. This appliance can be used by children (8 years and older)and persons with reduced physical, sensory or mental capabilities, or lack of experience and know ledge if they have been given instruction concerning the use of the appliance and understand the hazards involved. Children should not play with the appliance. Cleaning and user maintenance should not be performed by children.

13. If the air conditioner is used together with burners or other heating devices, thoroughly ventilate the room in order to avoid an oxygen deficiency.

14. Contact an authorized service technician for repair or maintenance of this unit.

15. Install drainage piping according to the instructions in this manual. Improper drainage may cause water damage to your home and property.

16. When moving or relocating the air conditioner, consult experienced service technicians for disconnection and re-installation of the unit.

17. The product must be properly grounded during installation or electrical shock could occur.

18. For more information on how to install the appliance to its support, please refer to the indoor unit installation and outdoor unit installation sections of this manual.

19. Keep the power plug clean and remove dust or grime that accumulates around the plug. A dirty plug could cause fire or electric shock.

Note about Fluorinated Gases:

1. This unit contains fluorinated greenhouse gases.
2. For specific information on the type of gas and the amount, please refer to the relevant label on the unit itself.
3. Service, maintenance, and repair of this unit must be performed by a certified technician.
4. Product un-installation and recycling must be performed by a certified technician.
5. For equipment that contains fluorinated greenhouse gases in quantities of 5 tonnes of CO2 equivalent or more, but less than 50 tonnes of CO2 equivalent, and has a leak-detection system installed, it must be checked for leaks at least every 24 months.
6. Keeping a record of all leak checks for the lifetime of the unit is strongly recommended.

Safety Precautions

Take note of fuse specifcations:

The air conditioner's circuit board (PCB) is designed with a fuse to provide overcurrent protection. The specifications of the fuse are printed on the circuit board ,such as: 65TS-300H/L30A/250AC.

CAUTION

This appliance is not intended for use by persons(including children) with reduced hysical, sensory or mental capabilities, or lack of experience and knowledge, unless they have been given supervision or instruction concerning use of the appliance by a person responsible for their safety.
Children should be supervised to ensure that they do not play with the appliance.

⚠ WARNING

- **When flammable refrigerant are employed, appliance shall be stored in a well-ventilated area Where the room size corresponds to the room area as specific for operation.**
  For R32 frigerant models:
  Aircon shall be installed, operated and placed in a room with a floor area larger than 4m.
  Must not installed in an unventilated space.
  Table 1.1 shows the min room area requirements for installing and operating each model.
- **Reusable mechanical connectors and flared ipints are not allowed indoors. (EN Standard Requirements)** e
- **Mechanical connectors used indoors shall have a rate ot ot more than3g/vear at 25% of th maximumn allowable pressure. When mechanical connectors are reused indoors. Sealing parts shall be renewed. When flared joints are reused indoors the flare part shall be re-fabricated. (UL Standard Requirements)**
- **When mechanical connectors are reused indoors, sealing parts shall be renewed. When flared joints are reused indoors,the flare part shall be re-fabricated. (IEC Standard Requirements)**
- **Mechanical connectors used indoors shall comply with ISO14903.**

TAKENOTEOFFUSESPECIFICATIONS

The air conditioner's circuit board (PCB) is designed with a fuse to provide over current protection. The specifications of the fuse are printed on the circuit board such as:
T3.15AL/250VAC.T5AL/250VAC.T3.15A/250VAC,T5A250VAC,T20A/250VAC,T30A/250VAC.ets
NOTE: For the units using R32 refrigerant, only the blast-proof ceramic fuse can be used.

Operating temperature
When your air conditioner is used outside of the following temperature ranges, certain safety
protection features may activate and cause the unit to disable.

Table 1.1	
Model Capacity (BTU/hr)	Room Area/m2
27k	4
36k	6





Caution: Risk of fire/ flammable materials

	WARNING	This symbol shows that this appliance used a flammable refrigerant. If the refrigerant is leaked and exposed to an external ignition source, there is a risk of fire.
	CAUTION	This symbol shows that the operation manual should be read carefully.
	CAUTION	This symbol shows that a service personnel should be handling this equipment with reference to the installation manual.
	CAUTION	This symbol shows that information is available such as the operating manual or installation manual.

WARNING for Using R32/R290 Refrigerant

- Do not use means to accelerate the defrosting process or to clean, other than those recommended by the manufacturer.
- The appliance shall be stored in a room without continuously operating ignition sources (for example: open flames, an operating gas appliance or an operating electric heater).
- Do not pierce or burn.
- Be aware that the refrigerants may not contain an odour.

1)Checks to the area

Prior to beginning work on systems containing flammable refrigerants, safety checks are necessary to ensure that the risk of ignition is minimised. For repair to the refrigerating system, the following precautions shall be complied with prior to conducting work on the system.

2)Work procedure

Work shall be undertaken under a controlled procedure so as to minimise the risk of a flammable gas or vapour being present while the work is being performed.

3)General work area

All maintenance staff and others working in the local area shall be instructed on the nature of work being carried out. Work in confined spaces shall be avoided. The area around the workspace shall be sectioned off. Ensure that the conditions within the area have been made safe by control of flammable material.

4)Checking for presence of refrigerant

The area shall be checked with an appropriate refrigerant detector prior to and during work, to ensure the technician is aware of potentially flammable atmospheres. Ensure that the leak detection equipment being used is suitable for use with flammable refrigerants, i.e. non-sparking, adequately sealed or intrinsically safe.

5)Presence of fire extinguisher

If any hot work is to be conducted on the refrigeration equipment or any associated parts, appropriate fire extinguishing equipment shall be available to hand. Have a dry powder or CO2 fire extinguisher adjacent to the charging area.

6)No ignition sources

No person carrying out work in relation to a refrigeration system which involves exposing any pipe work that contains or has contained flammable refrigerant shall use any sources of ignition in such a manner that it may lead to the risk of fire or explosion. All possible ignition sources, including cigarette smoking, should be kept sufficiently far away from the site of installation, repairing, removing and disposal, during which flammable refrigerant can possibly be released to the surrounding space. Prior to work taking place, the area around the equipment is to be surveyed to make sure that there are no flammable hazards or ignition risks. No Smoking signs shall be displayed.

7)Ventilated area

Ensure that the area is in the open or that it is adequately ventilated before breaking into the system or conducting any hot work. A degree of ventilation shall continue during the period that the work is carried out. The ventilation should safely disperse any released refrigerant and preferably expel it externally into the atmosphere.

8)Checks to the refrigeration equipment

Where electrical components are being changed, they shall be fit for the purpose and to the correct specification. At all times the manufacturer's maintenance and service guidelines shall be followed. If in doubt consult the manufacturer's technical department for assistance. The following checks shall be applied to installations using flammable refrigerants:

The charge size is in accordance with the room size within which the refrigerant containing parts are installed;

The ventilation machinery and outlets are operating adequately and are not obstructed;

If an indirect refrigerating circuit is being used, the secondary circuit shall be checked for the presence of refrigerant; Marking to the equipment continues to be visible and legible. Markings and signs that are illegible shall be corrected;

Refrigeration pipe or components are installed in a position where they are unlikely to be exposed to any substance which may corrode refrigerant containing components, unless the components are constructed of materials which are inherently resistant to being corroded or are suitably protected against being so corroded.

9)Checks to electrical devices

Repair and maintenance to electrical components shall include initial safety checks and component inspection procedures. If a fault exists that could compromise safety, then no electrical supply shall be connected to the circuit until it is satisfactorily dealt with. If the fault cannot be corrected immediately but it is necessary to continue operation, an adequate temporary solution shall be used. This shall be reported to the owner of the equipment so all parties are advised.

Initial safety checks shall include:

That capacitors are discharged: this shall be done in a safe manner to avoid possibility of sparking;

That there no live electrical components and wiring are exposed while charging, recovering or purging the system; That there is continuity of earth bonding.

Repairs to sealed components

1)During repairs to sealed components, all electrical supplies shall be disconnected from the equipment being worked upon prior to any removal of sealed covers, etc. If it is absolutely necessary to have an electrical supply to equipment during servicing, then a permanently operating form of leak detection shall be located at the most critical point to warn of a potentially hazardous situation.

2)Particular attention shall be paid to the following to ensure that by working on electrical components, the casing is not altered in such a way that the level of protection is affected. This shall include damage to cables, excessive number of connections, terminals not made to original specification, damage to seals, incorrect fitting of glands, etc. Ensure that apparatus is mounted securely. Ensure that seals or sealing materials have not degraded such that they no longer serve the purpose of preventing the ingress of flammable atmospheres. Replacement parts shall be in accordance with the manufacturer's specifications.

NOTE: The use of silicon sealant may inhibit the effectiveness of some types of leak detection equipment. Intrinsically safe components do not have to be isolated prior to working on them.

Repair to intrinsically safe components

Do not apply any permanent inductive or capacitance loads to the circuit without ensuring that this will not exceed the permissible voltage and current permitted for the equipment in use. Intrinsically safe components are the only types that can be worked on while live in the presence of a flammable atmosphere. The test apparatus shall be at the correct rating. Replace components only with parts specified by the manufacturer. Other parts may result in the ignition of refrigerant in the atmosphere from a leak.

Cabling

Check that cabling will not be subject to wear, corrosion, excessive pressure, vibration, sharp edges or any other adverse environmental effects. The check shall also take into account the effects of aging or continual vibration from sources such as compressors or fans.

Detection of flammable refrigerants

Under no circumstances shall potential sources of ignition be used in the searching for or detection of refrigerant leaks. A halide torch (or any other detector using a naked flame) shall not be used.

Leak detection methods

The following leak detection methods are deemed acceptable for systems containing flammable refrigerants. Electronic leak detectors shall be used to detect flammable refrigerants, but the sensitivity may not be adequate, or may need re-calibration. (Detection equipment shall be calibrated in a refrigerant-free area.) Ensure that the detector is not a potential source of ignition and is suitable for the refrigerant used. Leak detection equipment shall be set at a percentage of the LFL of the refrigerant and shall be calibrated to the refrigerant employed and the appropriate percentage of gas (25 % maximum) is confirmed. Leak detection fluids are suitable for use with most refrigerants but the use of detergents containing chlorine shall be avoided as the chlorine may react with the refrigerant and corrode the copper pipe-work. If a leak is suspected, all naked flames shall be removed/ extinguished. If a leakage of refrigerant is found which requires brazing, all of the refrigerant shall be recovered from the system, or isolated (by means of shut off valves) in a part of the system remote from the leak. Oxygen free nitrogen (OFN) shall then be purged through the system both before and during the brazing process.



Removal and evacuation

When breaking into the refrigerant circuit to make repairs or for any other purpose conventional procedures shall be used. However, it is important that best practice is followed since flammability is a consideration. The following procedure shall be adhered to:

Remove refrigerant; Purge the circuit with inert gas; Evacuate; Purge again with inert gas; Open the circuit by cutting or brazing.

The refrigerant charge shall be recovered into the correct recovery cylinders. The system shall be flushed with OFN to render the unit safe. This process may need to be repeated several times. Compressed air or oxygen shall not be used for this task. Flushing shall be achieved by breaking the vacuum in the system with OFN and continuing to fill until the working pressure is achieved, then venting to atmosphere, and finally pulling down to a vacuum. This process shall be repeated until no refrigerant is within the system. When the final OFN charge is used, the system shall be vented down to atmospheric pressure to enable work to take place. This operation is absolutely vital if brazing operations on the pipe-work are to take place. Ensure that the outlet for the vacuum pump is not close to any ignition sources and there is ventilation available.

Charging procedures

In addition to conventional charging procedures, the following requirements shall be followed. Ensure that contamination of different refrigerants does not occur when using charging equipment. Hoses or lines shall be as short as possible to minimise the amount of refrigerant contained in them.

Cylinders shall be kept upright.

Ensure that the refrigeration system is earthed prior to charging the system with refrigerant.

Label the system when charging is complete (if not already).

Extreme care shall be taken not to overfill the refrigeration system. Prior to recharging the system it shall be pressure tested with OFN. The system shall be leak tested on completion of charging but prior to commissioning. A follow up leak test shall be carried out prior to leaving the site.

Decommissioning

Before carrying out this procedure, it is essential that the technician is completely familiar with the equipment and all its detail. It is recommended good practice that all refrigerants are recovered safely. Prior to the task being carried out, an oil and refrigerant sample shall be taken in case analysis is required prior to re-use of reclaimed refrigerant. It is essential that electrical power is available before the task is commenced.

a) Become familiar with the equipment and its operation. b) Isolate system electrically. c) Before attempting the procedure ensure that: Mechanical handling equipment is available, if required, for handling refrigerant cylinders;All personal protective equipment is available and being used correctly; The recovery process is supervised at all times by a competent person; Recovery equipment and cylinders conform to the appropriate standards. d) Pump down refrigerant system, if possible. e) If a vacuum is not possible, make a manifold so that refrigerant can be removed from various parts of the system. f) Make sure that cylinder is situated on the scales before recovery takes place. g) Start the recovery machine and operate in accordance with manufacturer's instructions. h) Do not overfill cylinders. (No more than 80 % volume liquid charge). i) Do not exceed the maximum working pressure of thecylinder, even temporarily. j) When the cylinders have been filled correctly and the process completed, make sure that the cylinders and the equipment are removed from site promptly and all isolation valves on the equipment are closed off. k) Recovered refrigerant shall not be charged into another refrigeration system unless it has been cleaned and checked.

Labelling

Equipment shall be labelled stating that it has been de-commissioned and emptied of refrigerant. The label shall be dated and signed. Ensure that there are labels on the equipment stating the equipment contains flammable refrigerant.

Recovery

When removing refrigerant from a system, either for servicing or decommissioning, it is recommended good practice that all refrigerants are removed safely. When transferring refrigerant into cylinders, ensure that only appropriate refrigerant recovery cylinders are employed. Ensure that the correct number of cylinders for holding the total system charge is available. All cylinders to be used are designated for the recovered refrigerant and labelled for that refrigerant (i.e. special cylinders for the recovery of refrigerant). Cylinders shall be complete with pressure relief valve and associated shut-off valves in good working order. Empty recovery cylinders are evacuated and, if possible, cooled before recovery occurs. The recovery equipment shall be in good working order with a set of instructions concerning the equipment that is at hand and shall be suitable for the recovery of flammable refrigerants. In addition, a set of calibrated weighing scales shall be available and in good working order. Hoses shall be complete with leak-free disconnect couplings and in good condition. Before using the recovery machine, check that it is in satisfactory working order, has been properly maintained and that any associated electrical components are sealed to prevent ignition in the event of a refrigerant release.

Consult manufacturer if in doubt. The recovered refrigerant shall be returned to the refrigerant supplier in the correct recovery cylinder, and the relevant Waste Transfer Note arranged. Do not mix refrigerants in recovery units and especially not in cylinders. If compressors or compressor oils are to be removed, ensure that they have been evacuated to an acceptable level to make certain that flammable refrigerant does not remain within the lubricant. The evacuation process shall be carried out prior to returning the compressor to the suppliers. Only electric heating to the compressor body shall be employed to accelerate this process. When oil is drained from a system, it shall be carried out safely.

Safety Precautions

Instructions for Unpacking & Packing the Indoor & Outdoor Units

NOTE: Please keep all packaging materials included with the indoor and outdoor units in case they are needed for future use.

Unpacking:

Indoor Unit:

1. Carefully cut the sealing tape on the carton with a knife.
2. Remove the sealing nails on the top of the carton.
3. Open the carton.
4. Take out the middle support plate (if included).
5. Take out the accessory package and connecting wire(if included).
6. Lift the unit out of the carton and lay it on a flat surface that is sturdy enough to hold its weight.
7. Remove the left and right packing foam, or upper and lower packing foam (depending on unit), and Untie the packing bag.

Outdoor Unit:

1. Cut the packing belt.
2. Remove the unit from the carton.
3. Remove the foam from the unit.
4. Remove the packing bag from the unit.

Packing:

Indoor Unit:

1. Put the indoor unit into the packing bag.
2. Attach the left and right package foam, or upper and lower packing foam (depending on unit) to the unit.
3. Place the unit into the carton, then put the accessory bag in.
4. Close the carton and seal it with packaging tape.

Outdoor Unit:

1. Put the outdoor unit into the packing bag.
2. Put the bottom foam into the carton.
3. Place the unit into the carton, then put the upper packaging foam onto the unit.
4. Close the carton and seal it with packaging tape.

2. Parts Overview

Multi-Zone System Parts Diagram

With wall-mounted type air handler

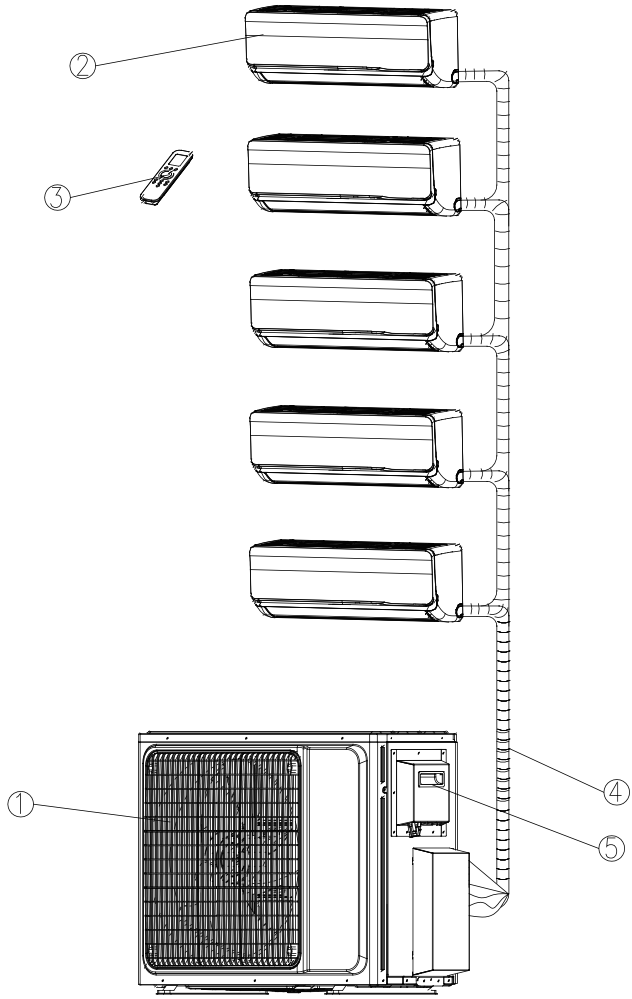

1. Put the indoor unit into the packing bag.

2.Attach the left and right package foam,or upper and lower packing foam (depending on unit) to the unit

3. Place the unit into the carton, then put the accessory bag in.

4. Close the carton and seal it with packaging tape

Overview - Indoor Unit Display

NOTE: Different models will have a different front panel and display window.

Not all of the features listed below will be equipped on the unit you have purchased.

Please check the indoor unit display window of the unit purchased to see which of these features your unit has.

Illustrations in this manual are for explanatory and demonstration purposes only.

The actual shape of your and size of your indoor unit may be different.

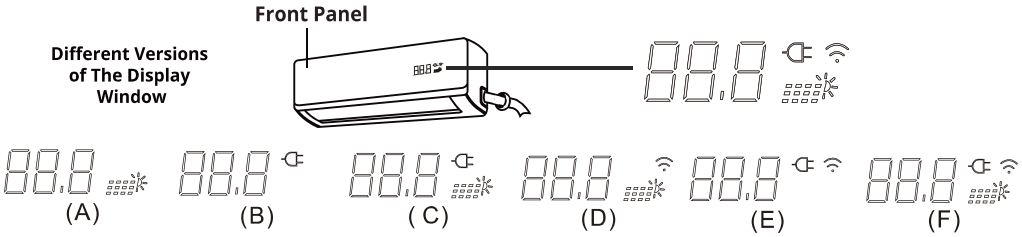

Display Code Meanings

The light is displayed when the photovoltaic controller is working(some units).

This will display when the Wireless Control feature is activated (some units).

When connected to the AC power,the light shows white.When the AC powe limiting function is enabled, the light shows blue

This is the temperature display and will also display operational features and error codes:

Will display when the unit is defrosting (cooling&heating units)

Error Code List

Error code showed on Dispaly board	Error code	Mark
Parameters fault from Indoor unit	01	
The communication faulty between indoor & outdoor	03	
indoor key stuck fault	04	
EEP ROM Fault Of outdoor	05	
Stall fault of indoor fan motor	06	
The temperature sensor is faulty (Evaporator outlet)	11	
The temperature sensor is faulty (Evaporator inlet)	12	
The compressor suction temperature sensor is faulty	14	
High pressure pressure sensor is faulty	15	
PFC overtemperature protection	17	
The PFC temperature sensor is faulty	18	
The temperature sensor is faulty (in the middle ofcondenser)	19	
Indoor unit overheating protection	20	
The indoor water pump drainage failure	21	
Wire controller communication failure	22	
High voltage switch Disconnect protection	24	
Low voltage switch Disconnect protection	25	
The communication Fault between utdoor PCB and the driver module	27	
The four-way valve is faulty	29	
The indoor ambient temperature sensor is faulty	31	
The indoor coil temperature sensor is faulty	32	
The outdoor ambient temperature sensor is faulty	35	
Temp sensor fault of outdoor heat exchanger	36	
The exhaust temperature sensor is faulty	37	
Exhaust overtemperature protection	39	
Refrigeration anti_overload protection	41	
High voltage protection	42	
Low voltage protection	43	
Indoor fan motor stall faul	51	
Outdoor fan motor failure	58	
The input current control failure	73	
Voltage protection	76	
The PFC overflows	81	
The IPM module is overheating	91	
Press stall failure	93	
The IPM module overflows	95	

Error code showed on Dispaly board	Error code	Mark
Oil return failure protection (insufficient light protection)	LO	
Low speed (stall)protection (low light protection)	LP	
Booster (Solar board) overcurrent protection	P6	
Booster (Solar board) leakage protection	P5	
The output voltage of the booster board is too low	P4	
The output voltage of the booster board is too high	P3	
The PV input voltage is too low.	P2	
The PV input voltage is too high	P1	
The communication between the Outdoor PCB and the booster plate (Solar board) is fault	P7	

Components Supplied		
Number	Quantity	
1	1	Indoor unit
2	1	Remote Controller
3	2	AAA battery
4	2	anti-drop cap
5	1	Drain pipe
6	1	Sealant putty
7	2	Screw accessories
8	1	Remote Control Bare
9	1	wrapping tape
10	1	single joint component(2/1 to 3/8 tooling， When the internal machine contains 18k/24K without quick connect fitting)
11	1	Outdoor unit
12	1	Unlock tool
13	/	MC4 style connector set for outdoor unit（1 Drive 3 Series have 1 set ,1 Drive 4 Series have 2 sets）
14	1	Allen wrench 5MM
15	1	Installation manual
16	1	drain port
17	1	wrapping tape
18	/	PG16 Waterproof connector (1 Drive 3 Series have 4 sets , 1 Drive 4 Series have 5 sets)

3. Operating Instructions

Operating Temperature Ranges

	COOL Mode	HEAT Mode	DRY Mode
Room Temperature	16°C~32°C (61℉~90℉)	0°C~32°C (32℉~90℉)	10°C~32°C (50 ℉~90 ℉)
Outdoor Temperature	-15°C~52°C (5℉~125.6℉)	-15°C~24°C (5℉~75℉)	0°C~50°C (32 ℉~122 ℉)

NOTES:

- If the air conditioner operates for extended periods in cooling mode and the humidity is high(over 80%), condensed water may drip out of the unit. If this occurs,set the vertical airflow louver to its maximum angle (vertical toward the floor),and set it to HIGH fan mode.

- Optimum performance will be achieved within the above operating temperatures.If the air conditioner is operated outside of the above te mperatures, certain safety protection features might be activated and cause the unit to function abnormally.

- ***FOROUTDOORUNITSWITHAUXILIARYELECTRICHEATER:***
  When the outside temperature is below 32°F (0°C) we strongly recommend keeping the unit plugged in at all time to ensure smooth ongoing performance.

Manual Operation(without remote)

CAUTION

The manual control button is intended for testing purposes and emergency operation only. Please do not use this function unless the remote control is lost and it is absolutely necessary. To restore regular operation, use the remote control to activate the unit.

THE UNIT MUST BE TURNED OFF BEFORE THE MANUAL OPERATION FUNCTION CAN BE ACTIVATED.

To operate the unit manually, follow these steps:

1. Open the front panel of the indoor unit.
2. Locate the **MANUAL CONTROL BUTTON** on the right-hand side of the unit.
3. Press the **MANUAL CONTROL BUTTON** one time to activate the **FORCED AUTO MODE.**
4. Press the **MANUAL CONTROL BUTTON** a Second time to activate the **FORCED COOLING FUNCTION.**
5. Press the **MANUAL CONTROL BUTTON** a third time to turn the unit off.
6. Close the front panel.

Manual control button

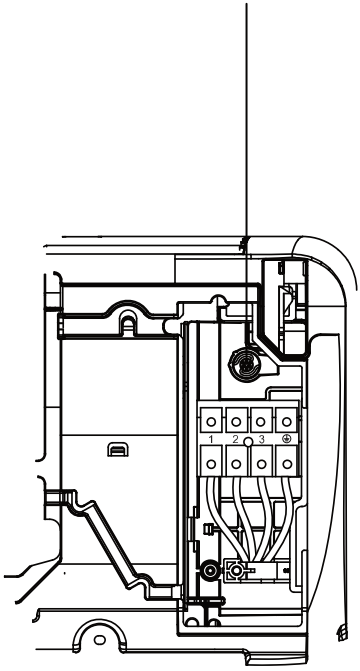

Airflow Directional Contro

Airflow Directional Control

● Adjustment of the vertical and horizontal louvers will change airflow direction of the indoor unit to prevent discomfort and/or uneven room temperatures.

● **Adjust the vertical louver using the remote.**

● **Adjust the horizontal louver manually by hand.**

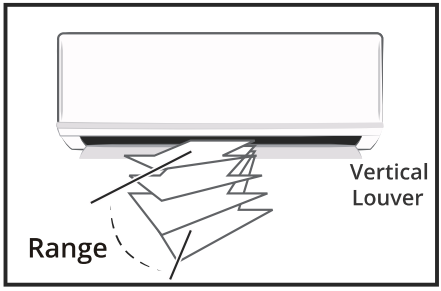

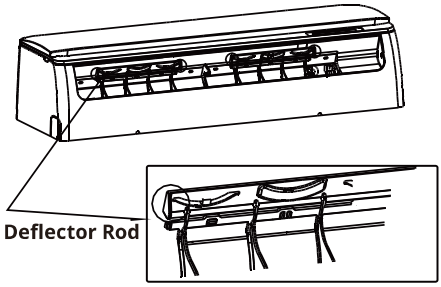

Horizontal Louver
(Horizontal Airflow
Grill inside)

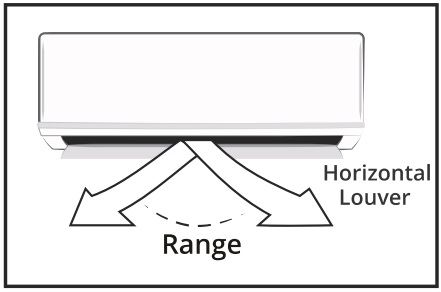

Adjust Vertical Airflow (Up/Down) using Vertical Louver

This function is performed by using the **SWING/DIRECT** button on the remote control, while the unit is operating.

The Vertical louver can move in small increments for each press, or continuously swing up and down automatically. Please refer to the**"Remote Control User Manual"** for further details.

Adjust Horizontal Airflow(Left/Right) using Horizontal Louver

The angle of the horizonta ouver must be set manually.

Move the deflector rod, located on the underside of the unit, by pushing the tab to manually adjust the airflow from side to side as desired. For some units, the horizontal angle of the airflow can be set by the remote control. Please refer to the **"Remote Control User Manual"** for further details.

CAUTION

- ⊘ ***DO NOT*** **put your fingers into the panel of the blower and suction side. The high speed fan inside may cause injury.**
- ⊘ ***DO NOT*** **operate the unit for extended periods of time in COOL or DRY mode with the vertical airflow direction set with too much of a downward angle. This could cause condensation to form on the surface of the vertical louver and allow moisture/water droplets to drop onto furnishings or the floor.**
- ⊘ ***DO NOT*** **move the vertical louver manually, as this could cause it to become out of sync. If this occurs, follow these steps:**
  1. **Turn off the power to the unit.**
  2. **Remove the wireless module from the back of the front cover.**
  3. **Turn off the power to the circuit at the breaker.**
  4. **Wait a few second sand turn the power back on at the breaker.**
  5. **Reinstall the wireless module into the front cover.**
  6. **Turn the power to the unit back on.**

  NOTE: After a quick restart, the vertical louver may remain static for approximately10 seconds.

NOTE: After a quick restart, the vertical louver-may remain static for approximately10 seconds.
NOTE: The open angle of the vertical louver should not be set too small when using COOL or HEAT mode, as it will restrict airflow and reduce performance of the unit.

Basic Operation Modes

AUTO/COOL/DRY/HEAT /FAN-ONLY

AUTO Mode:

When you set the unit in AUTO mode, it will automatically select **COOL, HEAT, or FAN-ONLY** mode depending on the set temperature and the room temperature. The unit will control the room temperature automatically, according to the temperature you set the unit to.

DRY Mode:

The temperature is regulated while dehumidifying by intermittently switching the **COOL or FAN-ONLY** modes on and off. The fan speed is set to LOW.

HEAT Mode:

The unit is a heat pump by design. By reversing the air conditioning process, it absorbs heat from the outdoors and transfers it to the indoor unit. At the same time, heat loading of the air conditioner increases due to larger differences between the indoor and outdoor temperature. As a result, the operating performance and efficiency is reduced as the outdoor air temperature drops. If you feel that the heating performance is insufficient, it is recommended that you supplement heating with other appliances. Droplets of water may form on the surface of the indoor unit when cooling occurs in relatively high humidity (defined as higher than 80%). Adjust the horizontal louver to the maximum air outlet position and select HIGH fan speed.

NOTE: When the Indoor unit reaches the temperature set by the user, the compressor will stop automatically and the system will switch to FAN-ONLY mode. The compressor will restart when the room temperature rises or falls from the set temperature.

SLEEP Mode (Fig.2.5):

The SLEEP function is used to decrease energy use while you sleep. During sleep you do not need the same temperature settings to stay comfortable. This function can only be activated via the remote control. **The SLEEP** function is not available in **FAN or DRY** modes.

When SLEEP mode is activated, the temperature will increase while cooling, or decrease while heating by 2 ℉ (1°C) per hour for the first 2 hours. Thereafter, it keeps
this new temperature for 6 hours before **SLEEP** mode will automatically switch off.

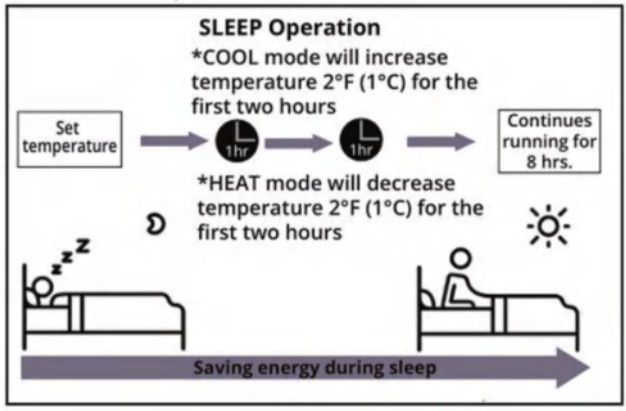

Fig. 2.5

NOTE: A lightening strike or cell phone being used near the unit could cause it to malfunction. In the event this occurs, disconnect the unit from it's power source, then reconnect it. Push the ON/OFF button on the remote controller to restart the system.

Basic Operation Modes

Optimal Operation

To achieve optimal performance, please note the following:

⊘ ***DO NOT*** **put any objects near the air inlets/outlets.**
Doing this would impair performance and could cause the unit to shut down.

- **Adjust the airflow direction correctly, so that it is not towards people or at an extreme angle.**
- **Adjust the temperature to achieve moderate comfort levels. An excessively low or high temperature setting wastes energy.**
- **Keep windows and doors closed, as this will improve performance.**
- **Limit energy usage (run time) using the TIMER function.**
- **Inspect the air filters periodically,and clean them as needed.**

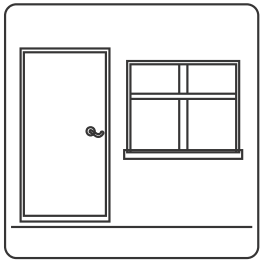

Doors and windows should be kept closed.

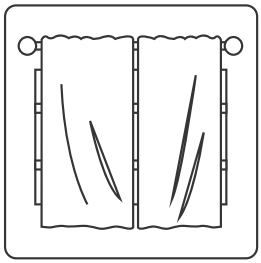

Closing the curtains while heating also helps keep the heat in

When two or more indoor units are operating at the that the mode selected by each same time, ensure indoor does not conflict.

When outdoor unit is operating , the priority operation mode is determine by outdoor environment temperature.When the outdoor temperature is above or equal to 16℃, the outdoor unit operates in the cooling mode as the priority. Only the indoor unit set to cooling mode, the outdoor unit will run in cooling mode. If the indoor unit is set to the heating mode, there will be no effect.When the outdoor temperature less than 16℃ the outdoor unit operates in the heating mode as the priority. Only the indoor unit set to heating mode, the outdoor unit will run in heating mode. If the indoor unit is set to the cooling mode, there will be no effect.

And will not change the operation mode of the machine that reaches the set temperature stop.

Note: If the cooling (heating) command is sent through the remote control, the unit will not perform cooling (heating), please confirm whether the mode selected by the internal machine conflicts.

Cooling judgment: air supply/dehumidification/cooling

Heating judgment: air supply/heating

Power-saving mode:

When the outdoor unit receives the power-saving command from all powered-on indoor units, the system enters power-saving mode.

The highest set percentage of power-saving among them determines the operation level.

Special Functions

Defrosting Function (cooling and heating models only):

Frost may be generated on the outdoor unit during a heat cycle, when the outdoor temperature is low and the humidity is high. This results in lower heating efficiency by the unit. Under these conditions, the air conditioner will stop heating operations and will begin defrosting automatically. The time to defrost may vary from 4 to 10 minutes, depending on the outdoor temperature and the amount of frost buildup on the outdoor condenser. NOTE: During defrosting, the indoor and outdoor fans will stop spinning.

Anti-Cold Air (Cooling & Heating Models Only):

The unit is designed not to blow cold air on HEAT mode, when the indoor heat exchanger is in one of the following three situations and the set temperature has not been reached. (A. When heating has just started; B: During defrosting; C: Low temperature heating). The indoor or outdoor fan stops running when defrosting.

Auto-Restart (some units):

If the unit is equipped with Auto-Restart, it will restart automatically and resume the previous operation when the power supply returns. NOTE: In order to protect the compressor, once it stops it cannot be restarted for 3 minutes.

Wireless Smart Control Function (some units):

This will allow the unit to be controlled by the remote control and/or the smartphone app.

CAUTION

The power supply must be disconnected before attempting any kind of cleaning or service.
Before performing maintenance, turn the power off to the unit and then disconnect the power to the circuit at the breaker. Failure to do this could cause electrical shock and injury.

- ⊘ ***DO NOT*** use benzene, thinner, polishing powder, or similar solvents for cleaning. These could cause the plastic to deform and/or crack.
- ⊘ ***DO NOT*** clean the unit with excessive amounts of water.
- ⊘ ***DO NOT*** touch the metal parts of the unit when removing the filter. Injuries can occur when handling the sharp metal edges.
- ⊘ ***DO NOT*** use water to clean the inside of the unit. Exposure to water can destroy the insulation, which could lead to electric shock.
- ⊘ ***DO NOT*** use a chemically treated cloth or duster to clean the unit.
- ⊘ ***DO NOT*** touch the air freshening(Plasma) filter for atleast10minutes after turning off the unit.
- ⊘ ***DO NOT*** clean the unit with combustible cleaning agents. These could cause fire and/or deformation of the unit.
- ⊘ ***DO NOT*** wash the air filter with water hotter than104°F（40°C).
- ⊘ ***DO NOT*** expose the filter to direct sunlight, as this could cause it to shrink. Allow the filter to dry in the shade.

Cleaning the Unit:

Wipe the unit with a soft dry cloth. If the unit is very dirty, wipe it with a cloth soaked in warm water.

- ⊘ ***DO NOT*** use bleach or abrasives.

4. Care and Maintenance

Cleaning the Air Filter and Air Freshener:

NOTE: A clogged air filter can greatly reduce heating and cooling efficiency of this unit. It is recommended to clean the unit every 2 weeks.

1.Open the front by carefully lifting both ends at the same time. As you continue lifting, at a certain angle there will be an audible click and the lid will become self-supporting. Some models are equipped with suspension bars that are required to prop the lid open.

2. Use the filter tabs to lift filter slightly upward and then pull it toward you.

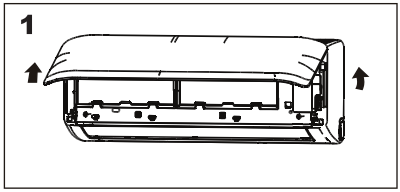

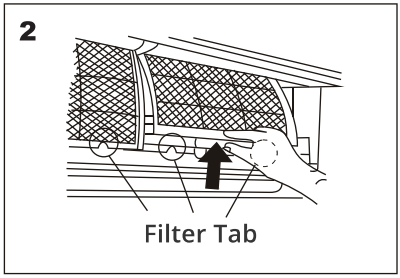

3. Then, extract the filter by gently drawing it downward.Replace as necessary.
4. Unclip the small air freshening filter from the larger air filter. Replace if necessary. Otherwise, clean it with a vacuum and clip it back into place after cleaning the larger air filter as outlined in step 5
5.Clean the large air filter with warm, soapy water. Be sure to use a mild detergent and rinse with fresh water. Shake off the excess water and allow it to dry in a cool area.
6. Re-clip the small air freshening filter into the large air filter.
7. Re-fit air filter back into the unit by reversing steps 2 and 3 by gently pushing the top of the filter up into the unit and then lowering the bottom portion into place.
8. Close the front panel of the unit. Make sure that it buckles securely and the panel is completely closed.

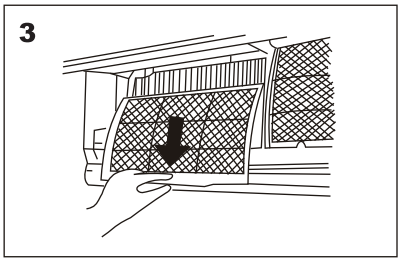

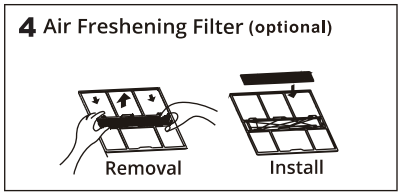

Cleaning the Unit

Preparation for Extended Non-Operation:

If you plan to not run the unit for an extended period time (e.g.from the end of summer to the beginning of the following summer), perform the following:

1. Clean the indoor unit and filters as outlined in the previous steps.
2. Operate the unit in FAN-Only mode for at least 8 hours to dry out the inside of the unit.
3. Turn off the unit. Then, turn off the power to the circuit at the breaker. The unit should be the only appliance on this circuit.
4. Remove the batteries from the remote control.
5. The outdoor unit also requires periodic mainte nance. However, it is highly recommended you contact a qualified service professional to perform this. Please do not attempt to do this on your own.

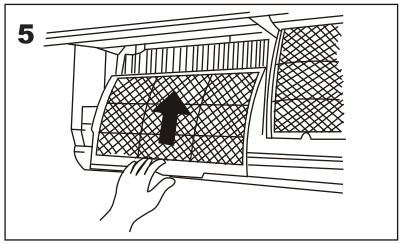

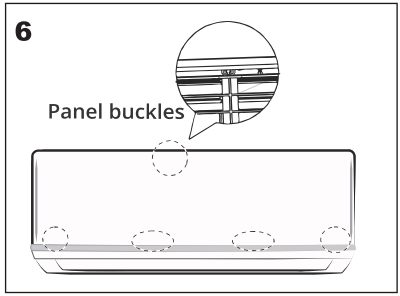

Pre-Season Inspection:

After prolonged non-operation perform the following:

1. Check for damaged or disconnected wires.
2. Clean the indoor unit and filters.
3. Check for water and oil leaks.
4. Check for blockages in the airflow inlet and outlet.
5. Replace batteries in the remote control.

5. Installation Diagram & Line Set Specifications

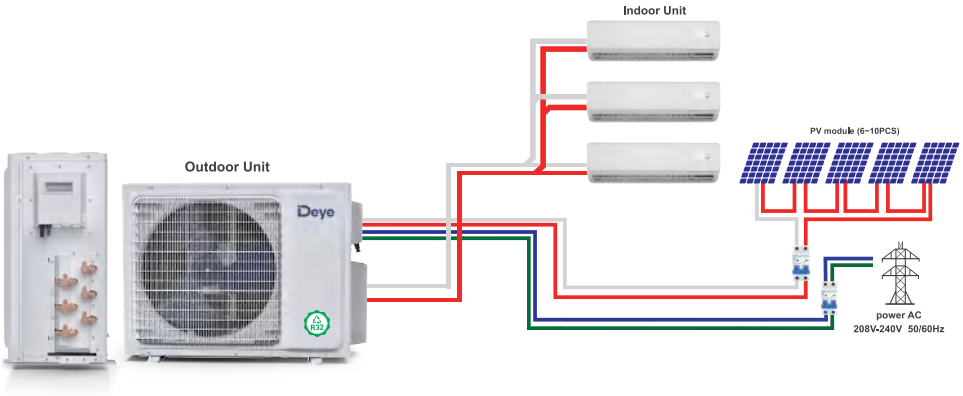

Item/ Capacity	27K	36K
Total length of copper pipe	<60m (<196.85ft)	<80m (<262.47ft)
Longest pipe(outdoor unit to indoor unit	<30m (<98.43ft)	<35m (<114.83ft)
Indoor/outdoor height difference	<15m (<49.21ft)	<15m (<49.21ft)
Height difference between indoor units	<10m (32.80ft)	<10m (32.80ft)

During the installation, the refrigerant pipe length and the height of the drop between the indoor and outdoor units must meet the requirements shown in the table above and the following figure

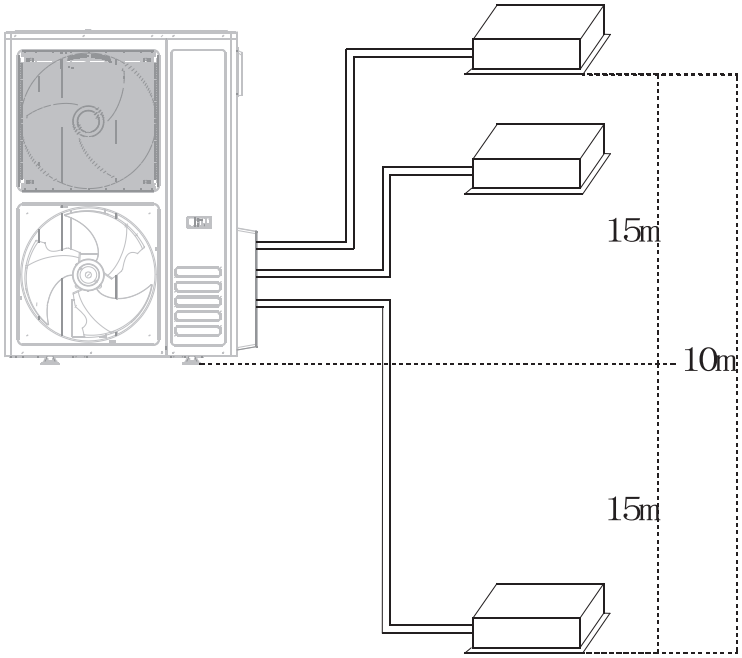

Note: The length of the refrigerant pipe affects the performance and energy efficiency of the unit The nominal efficiency test has a line length of 16.5 feet (5m), the standard pipe length in North America is 25 feet (7.5 m), and the refrigerant pipe length is not less than 9.84 feet (3m) to reduce excessive noise and vibration.

Capacity matching guide for outdoor unit and indoor unit

Additional refrigerant charge

		3 Zone	4 Zone
Pre-charged up to max total pipe length m (ft)		22.5 (75 ft)	30 (100 ft)
Additional refrigerant charge needed beyond total max length	g	18 g perexcess meter beyond total 23 meters	20 g perexcess meter beyond total 30 meters
	oz	0.19 oz per excess foot beyond total 75 feet	0.21 oz per excess foot beyond total 100 feet

27K	Suggested combination (Unit: Multiply by 1000BTU/H)		
1to3	1 indoor unit	2 indoor units	3 indoor units
	18	12+12	7+9+9
	—	12+18	12+12+12
	—	18+18	9+9+18
	—	—	9+9+9
	—	—	—
	—	—	—
	—	—	—
	—	—	—
	—	—	—
	—	—	—

36K	Suggested combination (Unit: Multiply by 1000BTU/H)			
1to4	1 indoor unit	2 indoor units	3 indoor units	4 indoor units
	24	12+12	12+12+12	9+9+9+9
	—	12+18	12+12+18	12+12+12+12
	—	12+24	12+12+24	12+12+12+18
	—	18+18	—	9+9+12+24
	—	18+24	—	—

When over matched operation, there is a corresponding capacity attenuation

If the indoor unit capacity exceeds the recommended value, check with the distributor

6.Indoor Unit Installation

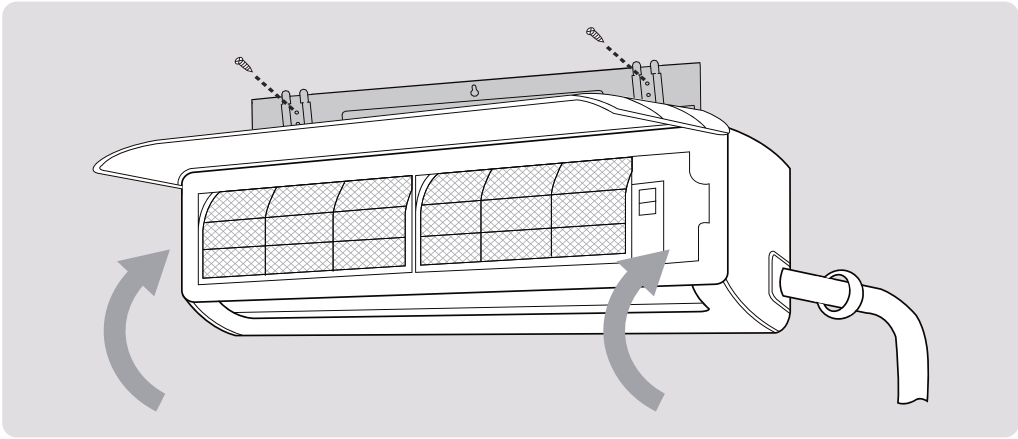

Installation Instructions – Indoor Unit

PRIOR TO INSTALLATION:

Before installing the indoor unit, refer to the label on the product box to make sure that the model numbers of the indoor unit and outdoor unit match.

Step 1: Selecting an installation location

Before installing the indoor unit, you must choose an appropriate location. The following standards and guidelines will help you choose an appropriate location for the unit.

Proper installation locations should meet the following standards:

- ☑ **Good air circulation**
- ☑ **Convenient drainage**
- ☑ **Noise from the unit will not disturb other people**
- ☑ **Firm and solid location that will not vibrate**
- ☑ **Strong enough to support the weight of the unit.**
- ☑ **A location that is at least 1 meter from all other electronic devices (e.g., TV, radio, computer)**

DO NOT **install the indoor unit in the following locations:**

- ⊘ **Near any source of heat, steam, or combustible gas.**
- ⊘ **Near flammable items such as curtains or clothing.**
- ⊘ **Near any obstacles that could block air circulation.**
- ⊘ **Near a doorway or where outside air may blow directly on the indoor unit.**
- ⊘ **In a location subject to direct sunlight exposure.**

NOTE ABOUT WALL HOLE

If there is no fixed refrigerant piping: While choosing a location, be sure that you leave ample room for a wall hole (see the Drill Wall Hole for Connective Piping step on the following pages) for the signal cable and refrigerant piping, which connect the indoor and outdoor units. The default position for all piping is the right-hand side of the indoor unit (while facing the front of the unit). After the piping and signal wire are installed, use the provided neoprene (spray foam can be used instead, if you prefer) to pack the space left in hole, in order to seal it and make it airtight.

Indoor UnitInstallation

Refer to the following diagram to ensure proper distance from walls and ceiling:

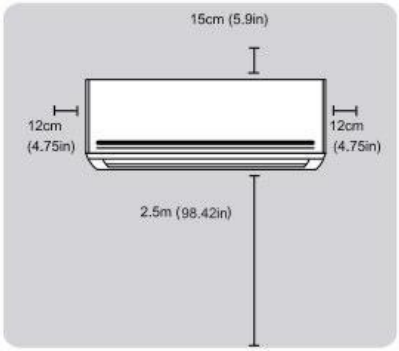

Step 2: Attach mounting plate to wall

The mounting plate is the device on which you will mount the indoor unit.

1. Remove the screw that attaches the mounting plate to the back of the indoor unit.

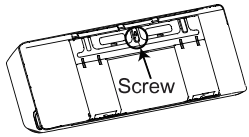

2. Place the mounting plate against the wall in a location that meets the standards in the Select Installation Location step. (See Mounting Plate Dimensions for detailed information on mounting plate sizes.)

3. Drill holes for mounting screws in places that:
   - have studs and can support the weight of the unit
   - correspond to screw holes in the mounting plate

4. Secure the mounting plate to the wall with the screws provided.

5. Make sure that mounting plate is flat against the wall.

NOTE FOR CONCRETE OR BRICK WALLS:

If the wall is made of brick, concrete, or similar material, drill 0.2 in diameter (5 mm diameter) holes in the wall and insert the sleeve anchors provided. Secure the mounting plate to the wall by tightening the screws directly into the clip anchors.

Step 3: Drill wall hole for connective piping

You must drill a hole in the wall for refrigerant piping, the drainage pipe, and the signal cable that will connect the indoor and outdoor units.

1. Determine the location of the wall hole based on the position of the mounting plate. Refer to Mounting Plate Dimensions on the next page to help you determine the optimal position. Refer to Fig. 4.3 wall hole diameter and install at a slight angle to facilitate drainage.

2. Using a core drill [3.5 in (76.2 mm) for 24K & 36K units, 2.5 in (65 mm) for all others], drill a hole in the wall. Make sure that the hole is drilled at a slight downward angle, so that the outdoor end of the hole is lower than the indoor end by about 0.2 to 0.275 in (5 mm-7 mm). This will ensure proper water drainage. (See Fig. 4.2)

   NOTE: When the gas side connective pipe is 5/8 in (16 mm) or more, the wall hole should be 3.54 in (90 mm).

3. Place the protective wall cu ffin the hole. This protects the edges of the hole and will help seal it when you finish the installation process

CAUTION

When drilling the wall hole, be sure to avoid wires, plumbing, and other sensitive components.

Indoor UnitInstallation

MOUNTING PLATE DIMENSIONS

Different models have different mounting plates.
For the different customization requirements, the shape of the mounting plate may be slightly different. However, the installation dimensions are the same for the same size of indoor unit.
See the illustrations for Type A and Type B below for an example. In order to ensure that you have ample room to mount the indoor unit, the diagrams to the right show different types of mounting plates along with the following dimensions:

- Height & Width of mounting plate
- Height & Width of indoor unit relative to plate
- Recommended position of wall hole (both to the left and right of mounting plate)
- Relative distances between screw holes

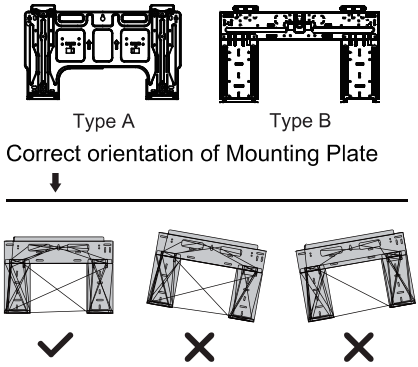

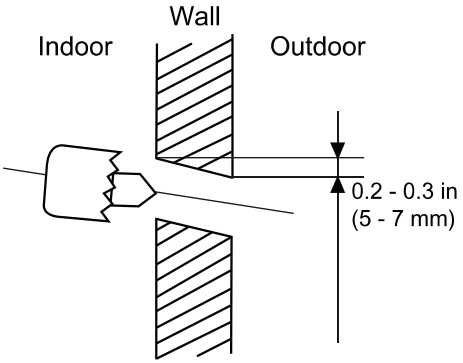

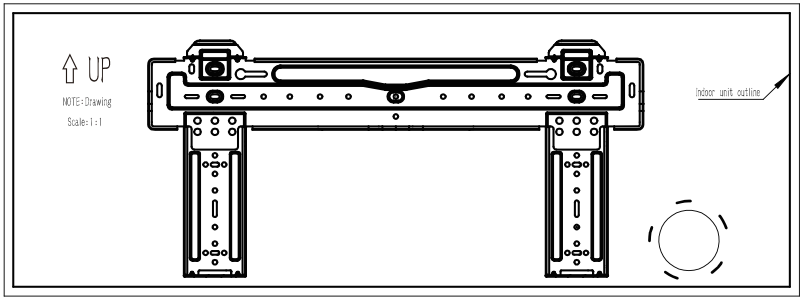

Use the installation guide board to drill bolt holes on the flat and safe wall, and drill holes with impact drills.
Install the indoor unit mounting panel on the wall to prevent unnecessary noise and vibration.
Level the installation board of the indoor unit and fix it with the appropriate anchor.

Indoor unit dimensions

07-12k

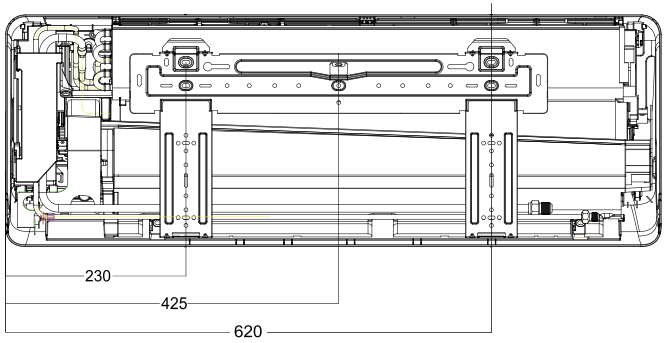

18k

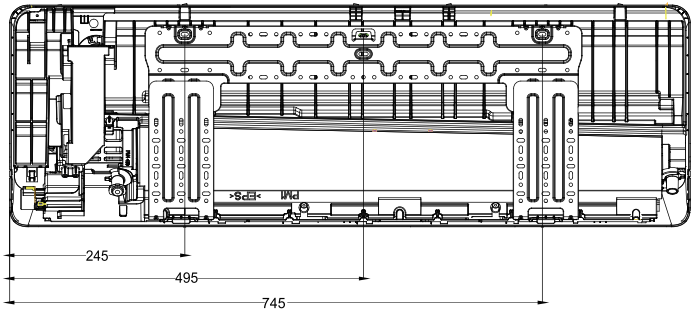

24k

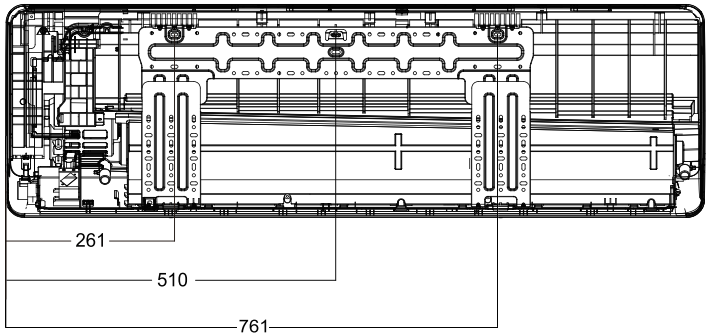

Indoor UnitInstallation

Step 4: Prepare refrigerant piping

The refrigerant piping is inside an insulating attached to the back of the unit. You must prepare the piping before passing it through the hole in the wall. Refer to the Refrigerant Piping Connection section of this manual for detailed instructions on pipe flaring and flare torque requirements, technique, etc.

1. Based on the position of the wall hole relative to the mounting plate, choose the side from which the piping will exit the unit.

2. If the wall hole is behind the unit, keep the knock-out panel in place. If the wall hole is to the side of the indoor unit, remove the plastic knock-out panel from that side of the unit. This will create a slot through which your piping can exit the unit. Use needle nose pliers if the plastic panel is too difficult remove by hand.

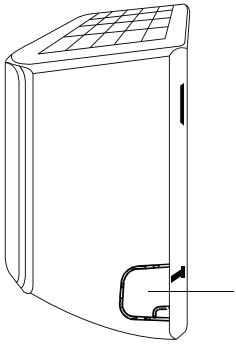

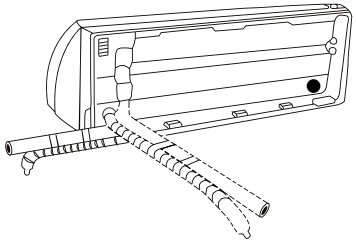

3. Use scissors to cut down the length of the insulating sleeve to reveal about 6 in (15 cm) of the refrigerant piping. This serves two purposes:

   To facilitate the Refrigerant Piping Connection process

   To facilitate Gas Leak Checks and enable you to check for dents

4. If existing connective piping is already embedded in the wall, proceed directly to the Connect Drain Hose step. If there is no embedded piping, connect the indoor unit's refrigerant piping to the connective piping that will join the indoor and outdoor units. Refer to the Refrigerant Piping Connection section of this manual for detailed instructions.

5. Based on the position of the wall hole relative to the mounting plate, determine the necessary angle of your piping.

6. Grip the refrigerant piping at the base of the bend.

7. Slowly, with even pressure, bend the piping towards the hole. DO NOT dent or damage the piping during the process.

NOTE ON PIPING ANGLE

Refrigerant piping can exit the indoor unit from four different angles:

- Left-hand side
- Left rear
- Right-hand side
- Right rear

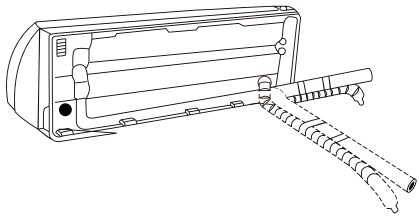

CAUTION

Be extremely careful not to dent or damage the piping while bending them away from the unit. Any dents in the piping will affect the unit's performance.

Indoor Unit Installation

Step 5: Connect drain hose

By default, the drain hose is attached to the left-hand side of unit (when you're facing the back of the unit). However, it can also be attached to the right-hand side.

1. To ensure proper drainage, the drain hose must exit the unit on the same side as the refrigerant piping.
2. Wrap the connection point firmly with Teflon tape to ensure a good seal and to prevent leaks.
3. For the portion of the drain hose that will remain indoors, wrap it with foam pipe insulation to prevent condensation.
4. Remove the air filter and pour a small amount of water into the drain pan to make sure that water flows from the unit smoothly.

NOTE ON DRAIN HOSE PLACEMENT

CAUTION

Make sure to arrange the drain hose according to Fig. 4.6a.

- DO NOT kink the drain hose.
- DO NOT create a water trap.
- DO NOT put the end of drain hose in water or a container that will collect water.

ENSURE UNUSED DRAIN HOLE IS PLUGGED

To prevent unwanted leaks be sure that the factory installed rubber plug is in the unused drain hole.

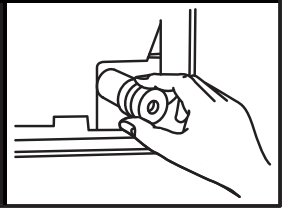

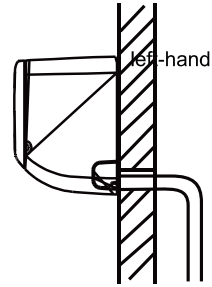

Make sure there are NO kinks or dents in the hose to ensure proper drainage.

NOT CORRECT
Kinks in the drain hose will create water traps.

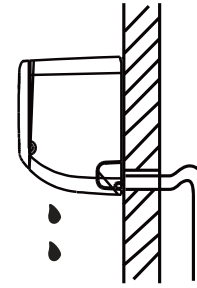

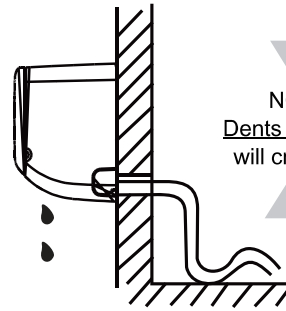

NOT CORRECT
Dents in the drain hose will create water traps.

NOT CORRECT
DO NOT place the end of the drain hose in water or in containers that collect water. This will prevent proper drainage.

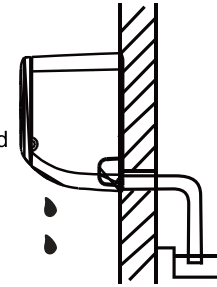

Indoor Unit Installation

Step 6: Connect signal cable

CHOOSE THE APPROPRIATE CABLE SIZE

The size of the power supply cable, signal cable, fuse, and switch needed is determined by the maximum unit current. The maximum unit current is indicated on the nameplate located on the side panel of the unit. Refer to this nameplate to choose the right cable, fuse, or switch.

NOTE: In North America, please choose the right cable size according to the Minimum Circuit Ampacity indicated on the nameplate of the unit.

TAKE NOTE OF FUSE SPECIFICATIONS

The air conditioner's circuit board (PCB) is designed with a fuse to provide overcurrent protection. The specifications of the fuse are printed on the circuit board, such as: T3.15A/250VAC, T5A/250VAC, etc.

1. Prepare the cable for connection:
2. Open front panel of the indoor unit.
3. Using a screwdriver, open the wire box cover on the right side of the unit. This will reveal the terminal block.

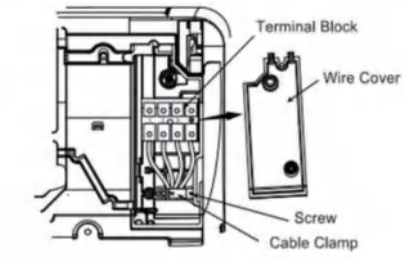

For the wiring diagram, see the indoor unit wiring nameplate in 9
Wiring diagram also found inside lid of interior unit

⚠ WARNING

All wiring must be performed in accordance with the wiring diagram Fig. 4.7a shown on the previous page.

4. Unscrew the cable clamp below the terminal block and place it to the side.
5. Facing the back of the unit, remove the plastic panel on the bottom left-hand side.
6. Feed the signal wire (protected by conduit) through this slot, from the back of the unit to the front.
7. Facing the front of the unit, match the wire colors with the labels on the terminal block, connect the u-lug and firmly screw each wire to its corresponding terminal.

❗ CAUTION

⊘ DO NOT MIX UP LIVE AND NULL WIRES
This is dangerous, and can cause the air conditioning unit to malfunction.

8. After checking to make sure every connection is secure, use the cable clamp to fasten the signal cable to the unit. Screw the cable clamp down tightly.
9. Replace the wire cover on the front of the unit, and the plastic panel on the back.

⚠ WARNING

THE WIRING CONNECTION PROCESS MAY DIFFER SLIGHTLY BETWEEN UNITS AND REGIONS.

Minimum Cross-Sectional Area of Power and Signal Cables North America	
Appliance Amps (A)	AWG
4	22
7	20
10	18
13	16
18	14
25	12
30	10
40	8
55	6
Other Regions	
Rated Current of Appliance (A)	Nominal Cross-Sectional Area (mm^2)
>3 and ≤6	0.75
>6 and ≤10	1
>10 and ≤16	1.5
>16 and ≤25	2.5
>25 and ≤32	4
>32 and ≤40	6

Indoor Unit Installation

Step 7: Wrap piping

Before passing the piping and drain hose through the wall hole, you must bundle them together to protect them, insulate them, and save space.

1. Bundle the drain hose and refrigerant pipes

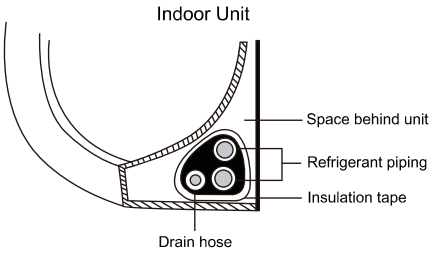

DRAIN HOSE MUST BE ON BOTTOM

Make sure that the drain hose is at the bottom of the bundle. Putting the drain hose at the top of the bundle can cause the drain pan to overflow, which may lead to fire or water damage.

SIGNAL CABLE PROTECTION

The signal cable must be protected by conduit before being pushed through the wall hole.

2. Using vinyl tape, attach the drain hose to the underside of the refrigerant pipes.
3. Using insulation tape, wrap the refrigerant pipes and drain hose tightly together.

DO NOT WRAP ENDS OF PIPING

When wrapping the bundle, keep the ends the piping unwrapped. You need to access them to test for leaks at the end of the installation process (refer to Electrical Checks and Leak Checks section of this manual).

Step 8: Mount indoor unit

If you installed new connective piping to the outdoor unit, do the following:

1. If you have already passed the refrigerant piping through the hole in the wall, proceed to Step 4.
2. Otherwise, double-check that the ends of the refrigerant pipes are sealed to prevent dirt or foreign material from entering the pipes.
3. Slowly pass the wrapped bundle of refrigerant pipes and drain hose through the hole in the wall.
4. Hook the top of the indoor unit on the upper hook of the mounting plate.
5. Check that unit is hooked firmly on mounting plate by applying slight pressure to the left and right-hand sides of the unit. The unit should not jiggle or shift.
6. Using even pressure, push down on the bottom half of the unit. Keep pushing down until the unit snaps onto the hooks along the bottom of the mounting plate.
7. Again, check that the unit is firmly mounted by applying slight pressure to the left and the right-hand sides of the unit.

Indoor Unit Installation

If refrigerant piping is already embedded in the wall, do the following:

1. Hook the top of the indoor unit on the upper hook of the mounting plate.

2. Use a bracket or wedge to prop up the unit, giving you enough room to connect the refrigerant piping, signal cable, and drain hose.

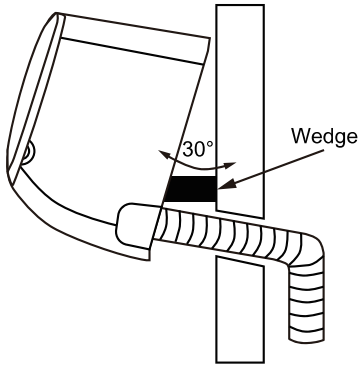

3. Connect drain hose and refrigerant piping (refer to Refrigerant Piping Connection section of this manual for instructions).

4. Keep piping connections exposed to perform the leak test (refer to Electrical Checks and Leak Checks section of this manual).

5. After the leak test, wrap the piping connection points with insulation tape.

6. Remove wedge bracket or wedge that is propping up the unit.

7. Using even pressure, push down on the bottom half of the unit. Keep pushing down until the unit snaps onto the hooks along the bottom of the mounting plate

UNIT IS ADJUSTABLE

Keep in mind that the hooks on the mounting plate are smaller than the holes on the back of the unit. If you find that you do not have ample room to connect embedded pipes to the indoor unit, the unit can be adjusted left or right by about 1.25 in -1.95 in (30 mm - 50 mm), depending on the model.

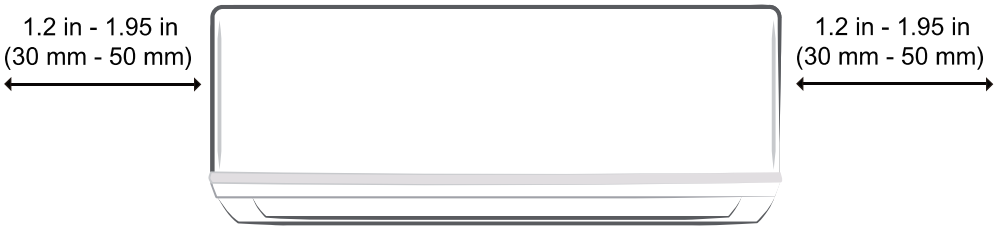

Move to left or right

7. Outdoor Unit Installation

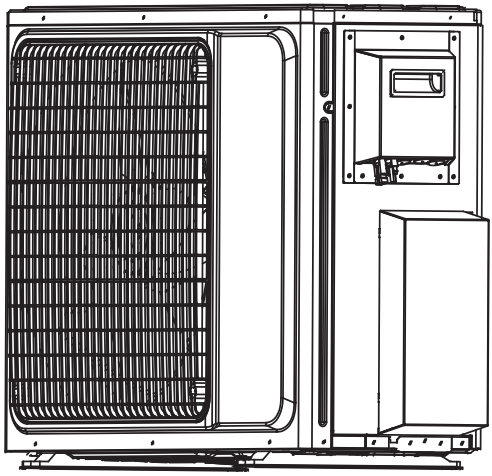

Installation Instructions- Outdoor Unit

Step1: Select installation location

Before installing the outdoor unit, you must choose an appropriate location. The following standards will help you choose an appropriate location.
Proper installation locations meet the following standards:

- ☑ Meets all spatial requirements shown in Installation Space Requirements.
- ☑ Good air circulation and ventilation.
- ☑ Firm and solid location that can support the unit and will cause vibration.
- ☑ Noise from the unit will not disturb others.
- ☑ Protected from prolonged periods of direct sunlight or rain.
- ☑ Where snowfall is anticipated, raise the unit above the base pad to prevent ice buildup coil damage. Mount the unit high enough to be above the average accumulated area snowfall. The minimum height must be18 inches.

Outdoor Unit Installation

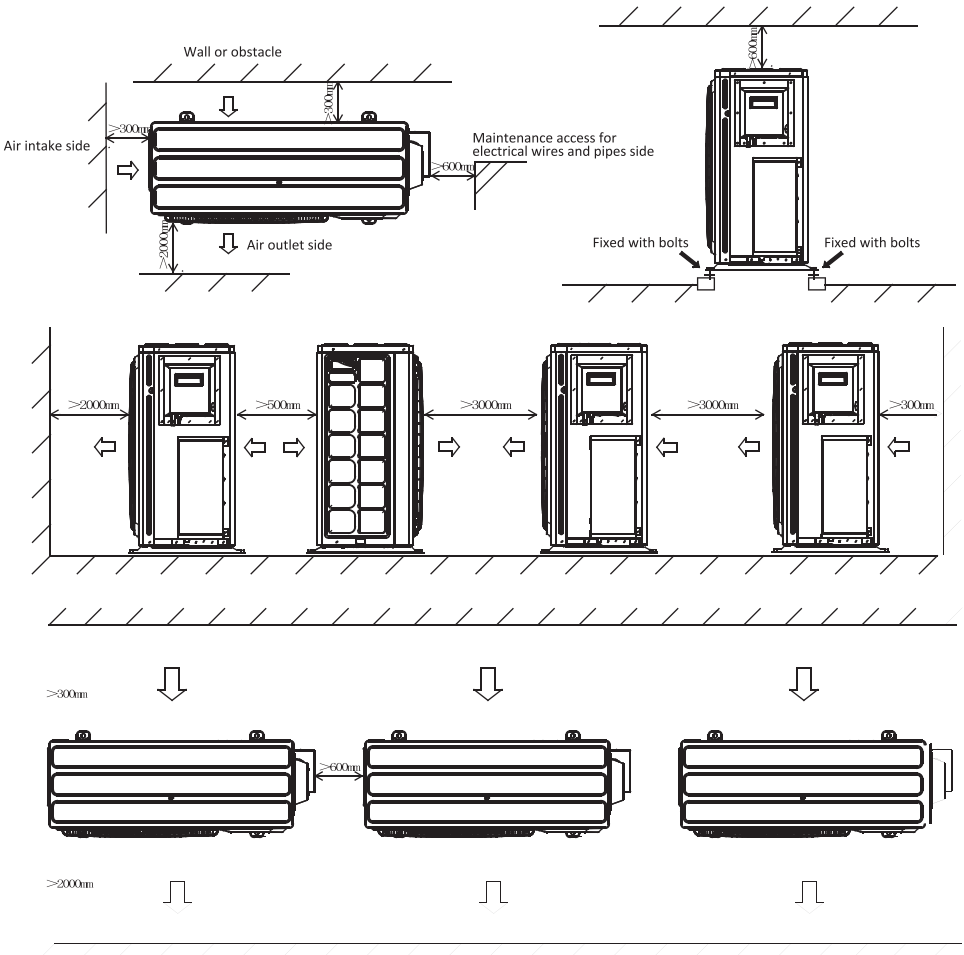

DO NOT

- Near an obstacle that will block air inlets and outlets
- Near a public street,crowded areas, or where noise from the unit will disturb others
- Near animals or plants that will be harmed by hotair discharge
- Near any source of combustible gas or in a location that is exposed to large amounts of dust
- In a location exposed to a excessive amounts of salty air

Outdoor Unit Installation

SPECIAL CONSIDERATIONS FOR EXTREME WEATHER

If the unit is exposed to heavy wind:

Install unit so that air outlet fan is at a 90° angle to the direction of the wind. If needed, build a barrier in front of the unit to protect it from extremely heavy winds.

Ensure the wind barrier does not block necessary airflow.

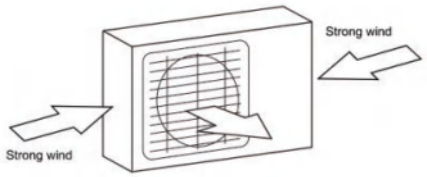

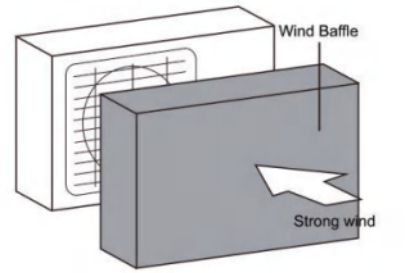

If the unit is frequently exposed to heavy rain or snow:

Build a shelter above the unit it to protect it from the rain or snow.Be careful not to obstruct air flow around the unit.

If the unit is frequently exposed to salty air(seaside):

Use the outdoor unit that is specially designed to resist corrosion.

Step 2: Install drain joint

Heat pump units require a drain joint. Before bolting the outdoor unit in place, you must install the drain joint at the bottom of the unit.

NOTE: that there are two different types of drain joints depending on the type of outdoor unit.

If the drain joint comes with a rubber seal, do the following:

1. Insert the drain joint into the hole in the base pan of the unit.
2. Rotate the drain joint 90°until it clicks in place facing the front of the unit.
3. Connect a drain hose extension (not included) to the drain joint to redirect water from the unit during heating mode.

If the drain joint doesn't come with a rubber seal, do the following:

1. Insert the drain joint into the hole in the base pan of the unit. The drain joint will click in place.
2. Connect a drain hose extension (not included) to the drain joint to redirect water from the unit during heating mode.

Outdoor Unit Installation

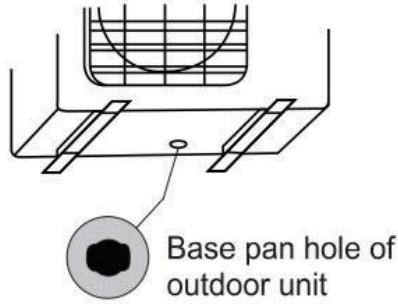

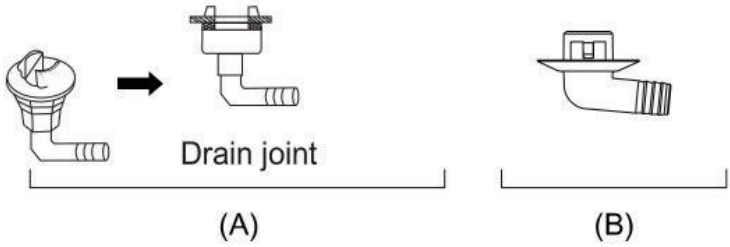

CAUTION

In cold climates,make sure that the drain hose is as vertical as possible to ensure swift water drainage. If water drains too slowly, it can freeze in the hose and flood the unit.

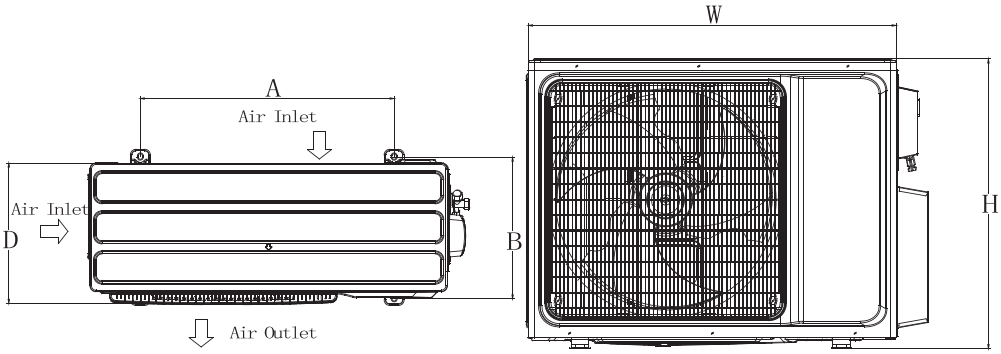

Outdoor Unit Installation

Step3: Anchor outdoor unit

The outdoor unit can be anchored to the ground or to a wall-mounted bracket with bolts (M10).

UNIT MOUNTING DIMENSIONS

The following is a list of different outdoor unit sizes and the distance between their mounting feet.
Prepare the installation base of the unit according to the dimensions below.

Model NO	Outdoor Unit Dimensions	Mounting Dimensions	
	Width (W) xHeight (H) xDepth (D)	Width(A)	Depth(B)
27K	888X700X318	632	352
36K	942*844*375	630	418

If you will install the unit on the ground or on a concrete mounting platform, do the following:

1. Mark the positions for four expansion bolts based on dimensions in the Unit Mounting Dimensions chart.
2. Pre-drill holes for expansion bolts.
3. Clean concrete dust away from holes.
4. Place a nut on the end of each expansion bolt.
5. Hammer expansion bolts into the pre-drilled holes.
6. Remove the nuts from expansion bolts,and place outdoor unit on the bolts.
7. Put a washer on each expansion bolt, then replace the nuts.
8. Using a wrench, tighten each nut until snug.

⚠ WARNING

WHEN DRILLING INTO CONCRETE, EYE PROTECTION IS RECOMMENDED AT ALL TIMES.

Outdoor Unit Installation

If you will install the unit on a wall-mounted bracket, do the following:

CAUTION

Before installing a wall-mounted unit, make sure that the wall is made of solid brick, concrete, or of similarly strong material. The wall must be able to support at least FOUR times the weight of the unit.

1. Mark the position of bracket holes based on dimensions in the Unit Mounting Dimensions chart.
2. Pre-drill the holes for the expansion bolts.
3. Clean dust and debris away from holes.
4. Place a washer and nut on the end of each expansion bolt.
5. Thread expansion bolts through holes in mounting brackets, put mounting brackets in position, and hammer expansion bolts into the wall.
6. Ensure that the mounting brackets are level.
7. Carefully lift the unit and place its mounting feet on the brackets.
8. Using a wrench,bolt the unit firmly to the brackets.

Step 4: Connect signal and power cables

The outside unit's terminal block is protected by an electrical wiring cover on the side of the unit. A comprehensive wiring diagram is printed on the inside of the wiring cover.

1. Prepare the cable for connection:

USE THE RIGHT CABLE

- See table below for gauge requirements

Model Capacity(BTU/hr)	AWG	
	Min	Pref
27K	14	14
36K	12	12

Outdoor Unit Installation

1.Remove the electrical wiring cover from the unit by loosening the 3 retaining screws.

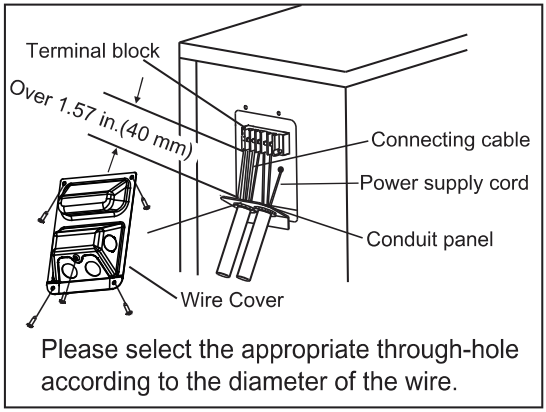

3. Remove the caps on the conduit panel.
4. Temporarily mount the conduit tubes (not included) on the conduit panel.
5. Properly connect both the power supply and low voltage lines to the corresponding terminals on the terminal block.
6. Ground the unit in accordance with local codes.
7. Be sure to size each wire so that it allows for it to be several inches longer than the required length for wiring.
8. Use lock nuts to secure the conduit tubes.
9. Replace the wire cover and reinstallthe3 screws.

⚠ WARNING

ALL WIRING MUST PERFORMED STRICTLYIN ACCORDANCE WITH THE WIRING DIAGRAM LOCATED INSIDE THE OUTDOOR UNIT'S WIRE COVER.

Connect the connective cables to the terminals, as identified, with their matching numbers on the terminal block of the indoor and outdoor units. For example, Terminal (A1) of the outdoor unit must connect with terminal 1 on the indoor unit A. The outdoor unit can match different types of indoor units, therefore the numbers on the terminal block of the indoor unit may be slightly different.

Outdoor Unit Installation

3-Zone System

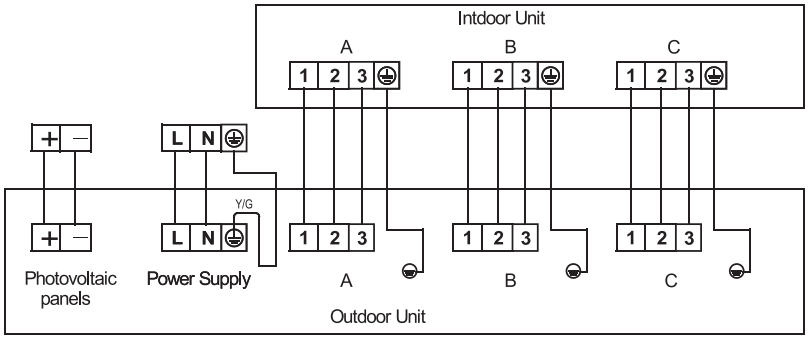

Outdoor Unit Installation

4-Zone System

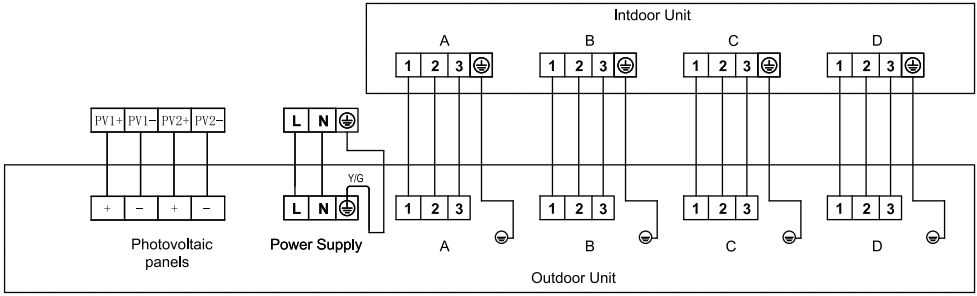

Connecting pipe installation



The indoor unit contains an inert gas. Use caution when loosening the flared fittings to vent the gas.

Step 5: Connecting pipe installation

Note: When installing pipes, you are advised to install the pipes at B before A, and the liquid pipe before the gas pipe.

Connecting pipe installation

1 Cut the piping with a pipe cutter

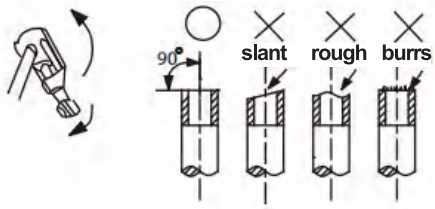

2 Expand the pipe sleeve like a connecting nut

outer diameter	A (mm)	
	maximum (max)	minimum (min)
φ6.4	8.7	8.3
φ9.5	12.4	12.0
φ12.7	15.8	15.4
φ15.9	19.0	18.6
φ19.1	23.3	22.9

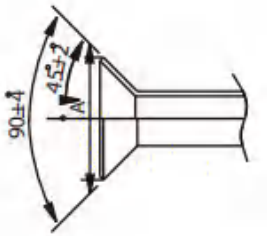

3 Align the connecting pipe, tighten the connecting nut by hand, and then use the wrench to tighten as shown in the picture below

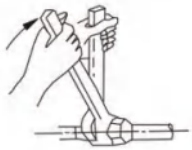

PIPE SIZE (mm)	TIGHTENING TORQUE
φ6.4	1420～1720N·cm (144～176kgf·cm)
φ9.5	3270～3990N·cm (333～407kgf·cm)
φ12.7	4950～6030N·cm (504～616kgf·cm)
φ15.9	6180～7540N·cm (630～770kgf·cm)
φ19.1	9720～11860N·cm (900～1210kgf·cm)

4 Vacuum the system

Indoor units and the pipes between indoor and outdoor units must be evacuated and leak tested to remove trapped air and moisture from the system. ONE CIRCUIT AT A TIME. This procedure should start after all electrical connections are finalized and the system receives proper power for immediate test running, to be performed one circuit at a time.

Connecting pipe installation

Evacuation using a vacuum pump:

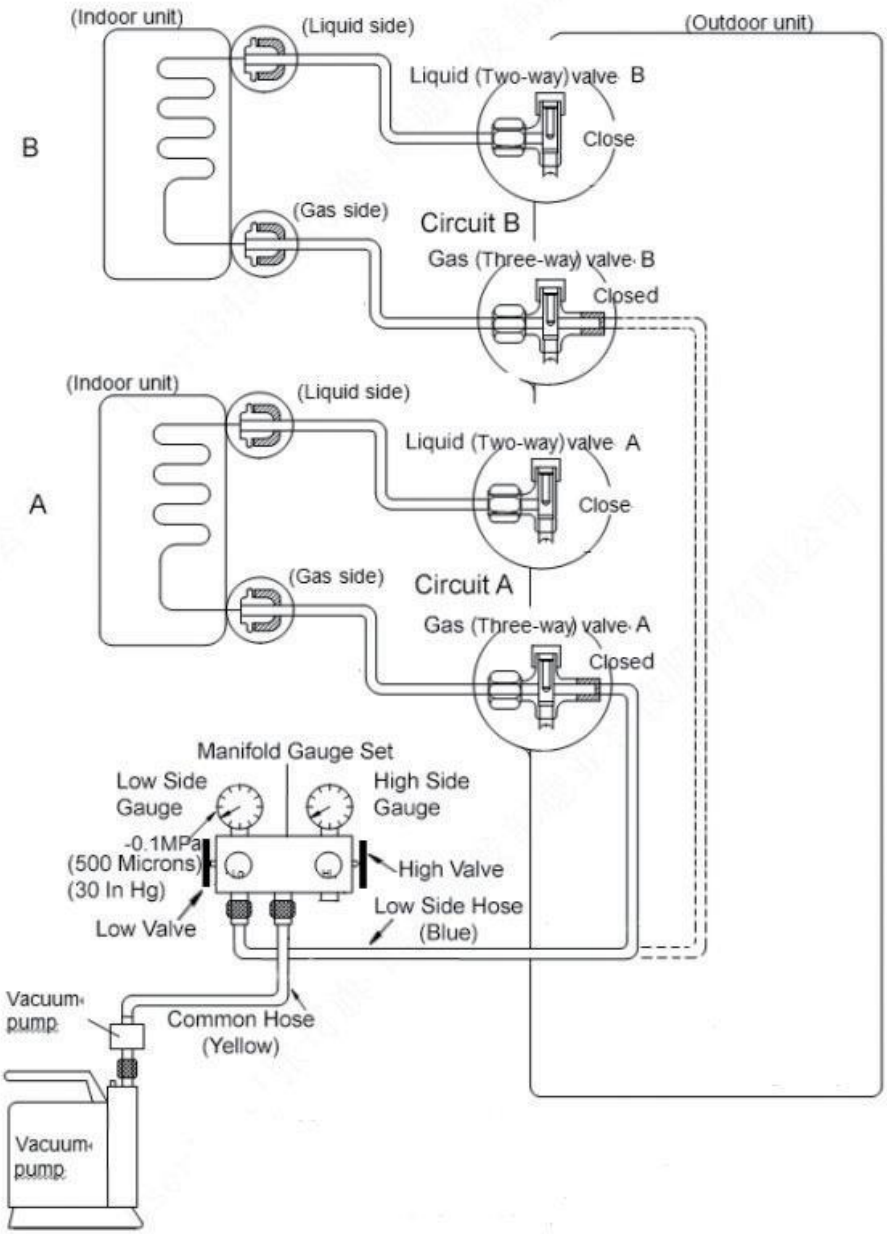

Connecting pipe installation

1. Completely tighten ALL brass flare nuts, which connect the ends of copper refrigerant lines to the attached indoor units and the circuit service valves on the outdoor unit, using proper torque.
2. Assure that both the 2-way (Liquid) and 3-way (Gas) valves for each circuit at the outdoor unit **STAY CLOSED** as they arrived originally.
3. Connect the low pressure hose on your gauge manifold (usually blue) to the 3-way (Gas) valve's service port, belonging to circuit A. Note: If there is only one indoor unit it should be connected to circuit A as the primary.
4. Connect the center hose of the gauge manifold (usually yellow) to the vacuum pump.
5. Fully open the Low side valve on the low pressure side of your gauge manifold. Assure that the High side valve on the high pressure side of your gauge manifold stays closed.
6. Start the vacuum pump and operate according to pump manufacturer's specifications. If your vacuum pump has a valve, open it as well.
7. Perform vacuuming / evacuation for a minimum period of 30 minutes and check that the low pressure gauge indicates a vacuum of 30 in/hg (500 microns). (A more sensitive vacuum gauge should be used if available).
8. If the proper vacuum cannot be achieved within 30 minutes, the vacuum pump should be kept running for an additional 15 minutes. If after the additional 15 minutes of operation, the vacuum still cannot be achieved, there could be a leak at one or more of the flare pipe connections at either end of a refrigerant pipes. Leak must be located and the leaking nut must be tightened properly before re-vacuuming the circuit.
9. If the vacuum is achieved, close the low side valve at the low pressure side on your gauge manifold first and shut the vacuum pump off. Leave the gauge manifold set and the hoses connected and recheck the vacuum reading 15 minutes later to assure there is no vacuum loss. (Very small increase in vacuum level is normal).
10. Circuit A is now dry and free of contaminants. Do not remove the hose of your gauge manifold set from the service port.
11. Remove the 2-way (Liquid) Valve's brass dust cap of circuit A. Insert proper size Allen wrench into the valve core and turn it counter clockwise for 1 turn for, wait for 3 seconds and quickly close the valve by turning it in reverse direction. Check your low pressure gauge on the manifold to assure it now indicates positive pressure of approximately 80 to 120 PSI in your lines.
12. Apply soap-water mixture on both the indoor unit connections and the outdoor unit connections for circuit A with a soft brush to check for leakage at the connecting points of the piping. If you notice air bubbles, the specific connector has leakage An electronic leak detector will be more efficient to use for this if available).

Connecting pipe installation

13. Re-insert proper size Allen wrench into the valve core of the Liquid Valve (2 way) valve for circuit A and turn it counter clockwise until it is fully back seated. Do not force it, once it stops turning. Repeat the leak checking procedure entirely at all connections of circuit A. If you find a new leak, close the 2-way (Liquid) valve you just opened first and tighten the flare nut at the leaking connection until the leak is sealed. Reopen the 2-way (Liquid) valve and check again.
14. Remove the 3-way (Gas) Valve's dust cap for circuit A. Insert proper size Allen wrench into the valve core and turn it counter clockwise until it is fully back seated. Do not force it, once it stops turning.
15. Power up the system, and run the indoor unit for circuit A in COOLING mode to assure that all functions are working.
16. Switch the indoor unit of circuit A to HEAT mode and assure that all functions are working.
17. Set the temperature on remote to HIGHEST setting and while the unit is running in heat mode, check one last time for leaks at all 4 related pipe connections of circuit A. It is easier to catch even smallest leaks in HEAT mode as the pressures are much higher.
18. If you discover a leak that cannot be stopped by tightening the flare nuts at this stage, shut off both 2 way (liquid) and 3 way (Gas) service valves, repair the leak properly and start from the beginning. Please remember you may need to add fresh refrigerant to the system as a significant value may be lost at this stage.
19. REPEAT THIS ENTIRE PROCEDURE FOR THE REMAINING CIRCUITS, B, C, D, E.

21. When the external machine is not included the quick Connector Plug-N-Cool Kits and the internal machine contains 18k/24K, 2/1in to 3/8in tooling is required.

18K/24K Unit Connection Requirements:

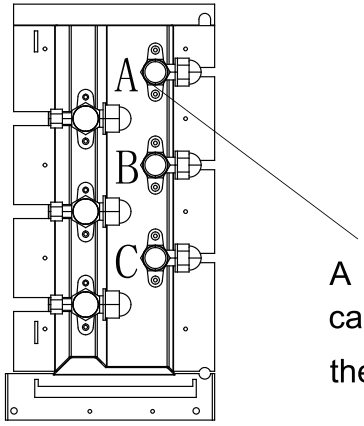

A 18K or 24K indoor unit can only be connected with the A port.

Connecting pipe installation

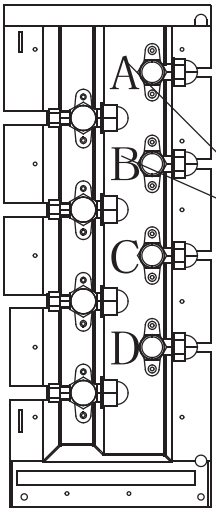

A 18K or 24K indoor unit can only be connected with the A port.

If there are two 18K indoor unit, they can be connected with the A and B ports.

Step 6: Wiring/piping inspection

There can be no cases of a partial association mismatch, such as a cross terminal/partial wiring mismatch or one side of the refrigerant system being crossed between handlers.

Connecting pipe installation

CORRECT CONNECTION

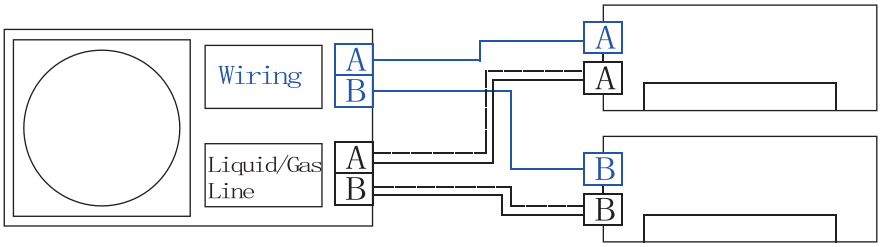

INCORRECT - CONNECTION CAN BE CORRECTED

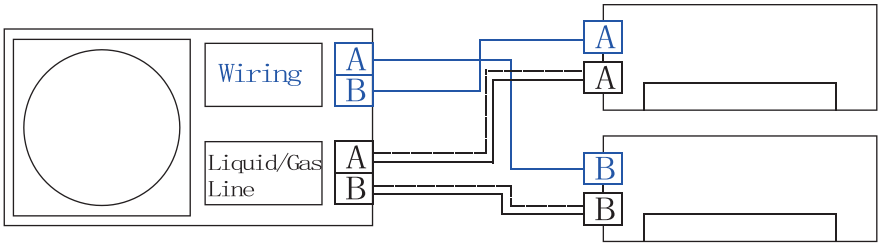

NO OTHER CORRECTABLE COMBINATIONS
(gas/liquid lines cannot be mixed between units)

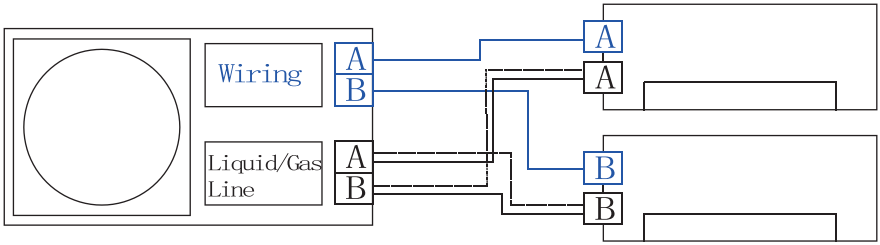

Wiring
Liquid Line
Gas Line

Releasing the refrigerant into the system

Step 7: Releasing the refrigerant into the system

At the outdoor unit remove the protective cap.

Insert a hex key wrench and turn the bottom valve anti-clockwise until it seats against the outer seal.

Reinstall the protective cap and tighten it to 30-40 NM.(snug)Take care not to over tighten.

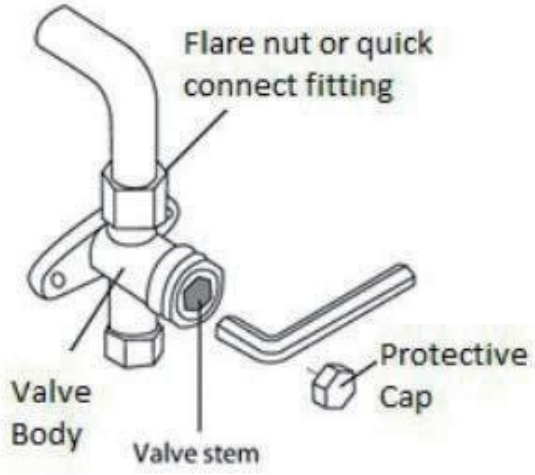

8. Installation of Solar Photovoltaic Modules

Installation of Solar Modules

Solar Modules must be installed in accordance with all applicable codes.

Some of them are the local building codes, the Building Code of Australia, AS/NZS 4777 and AS /5033.

They must be installed by a licenced, competent person.

Solar Array Maximum Voltage

The maximum Voltage Open Circuit (VOC) must be calculated to account for low temperature voltage rise.

Failure to do may damage the equipment and void warranty.

For guidance see AS/NZS 5033 4.2 PV array maximum voltage.

The maximum Voltage Open Circuit for this equipment is shown in the following table 8.1

Outdoor unit		27K	36k
Power AC	**Hz**	1Ph 208-240V/50 -60HZ	1Ph 208-240V/50 -60HZ
Max input power	**W**	3200	4300
Circuit breaker RCBO Type A or B	**A**	25	32
Power DC	**VDC**	150-410	100-410
	ISC	＜/＝28 Adc	</=16 Adc+16 Adc
DC MAX VOL TAGE	**Voc**	410	410
Max DC input current draw	**A**	20	13+13
Max DC input power draw	**W**	3200	2500+2500
Number of MPPT inputs	**#**	1	2

For example, if the lowest recorded temperature is 4 to 0 degrees C and the VOC of a module is 44.2 Vdc, one would multiply 44.2 by 1.1 equalling 48.62volts.

Dividing the maximum VOC input of 380 Vdc by 48.62 yields the maximum number of solar modules 7.81.

Rounding down yields 7 modules max at that low temperature.

Installation of Solar Photovoltaic Modules

VOLTAGE CORRECTION FACTORS FOR CRYSTALLINE AND MULTI-CRYSTALLINE SILICON PV MODULES

Lowest expected operating temperature ℃	Correction factor
24 to 20	1.02
19 to 15	1.04
14 to 10	1.06
9 to 5	1.08
4 to 0	1.10
-1 to -5	1.12
- 6 to -10	1.14
-11 to -15	1.16
-16 to -20	1.18
-21 t0 -25	1.20
- 26 to-30	1.21
- 31 to -35	1.23
- 36 to -40	1.25

Solar Array Maximum Current

Paralleling of the solar array is not recommended as the maximum rated Array Short circuit current is 12 amps.

Galvanic Considerations Outdoor Unit

The outdoor unit is to be treated as a non-galvanically isolated regulator. The solar isolation switches must be rated for the full array voltage and current. If connected to the AC supply, the outdoor unit must be connected to the 230-volt AC distribution board via a type A or B residual current and overcurrent device

Solar Module Installation

This manual contains information regarding the installation and safe handling of solar photovoltaic module(s). All instructions should be read and understood before attempting to install.
If there are any questions, please contact our sales department for further explanation.
The installer should conform to all safety precautions listed in this guide when installing the modules.
Local codes and regulations must be followed.

Installation of Solar Photovoltaic Modules

This manual does not describe specific structures and installation procedures.

An approved solar technician must be consulted to determine the following:

- ☑ **The specifications of the solar photovoltaic system**
- ☑ **Cable material**
- ☑ **Connecting components**
- ☑ **Bracket and support**
- ☑ **Supporting parts**
- ☑ **Switching and circuit protection**

Solar modules are large and require careful handling.
Only a qualified technician should install Solar Modules.
Solar arrays are current limited sources. Use appropriate protection measures when working on them. They contain hazardous DC voltages.

Installation of Solar Modules should be performed only by qualified persons, who are familiar with the mechanical and electrical requirements.

All electrical connections should be made with approved MC-4 type connectors, and from the same manufacturer. (AS/NZS 5033 clause 4.3.7 (k))

One individual solar module generates DC voltage greater than 30V when exposed to sunlight. Contact with a DC voltage of 30V or more is potentially hazardous.
Do not touch the contacts of electrical terminals.

Do not touch the module contacts.

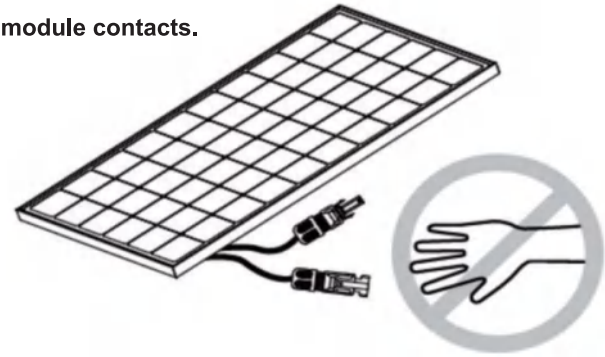

Installation of Solar Photovoltaic Modules

Keep children away from the system while transport and installing mechanical and electrical components.

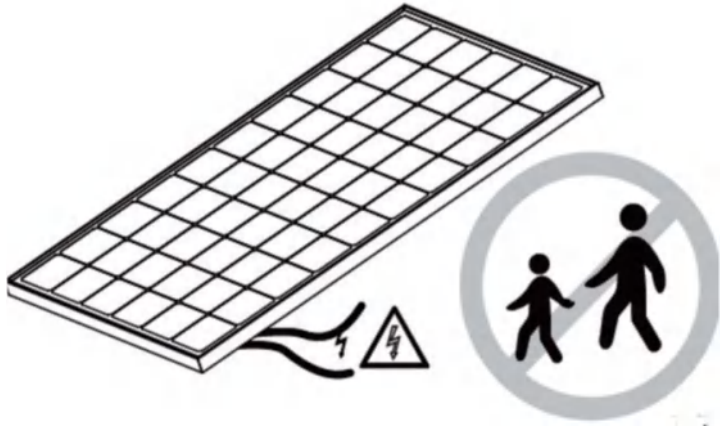

Completely cover the module with an opaque material during installation to keep electricity from being generated. Do not touch the ends of live wires. Do not wear metallic rings, watchbands, ear, nose lip rings or other metallic devices while installing or troubleshooting photovoltaic systems.

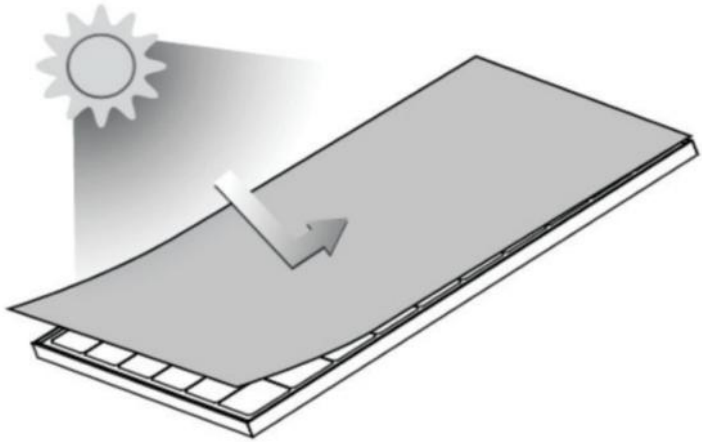

Installation of Solar Photovoltaic Modules

Use only insulated tools that are approved for electrical installations.

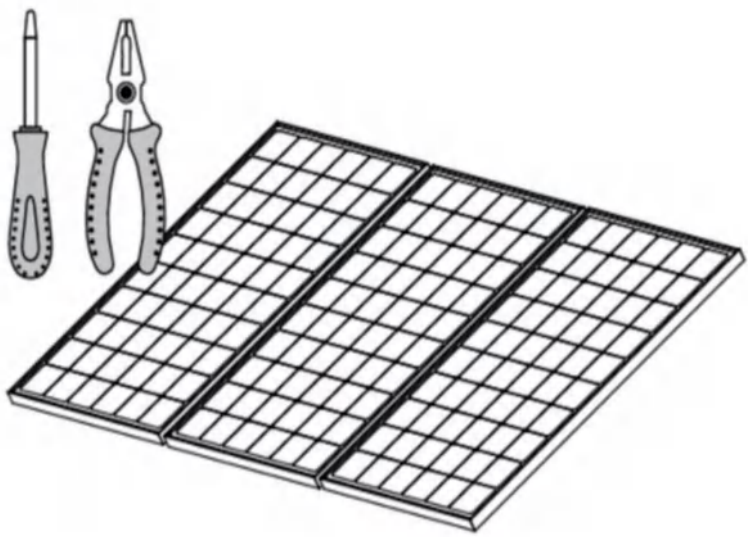

Do not work on solar modules in wet conditions.

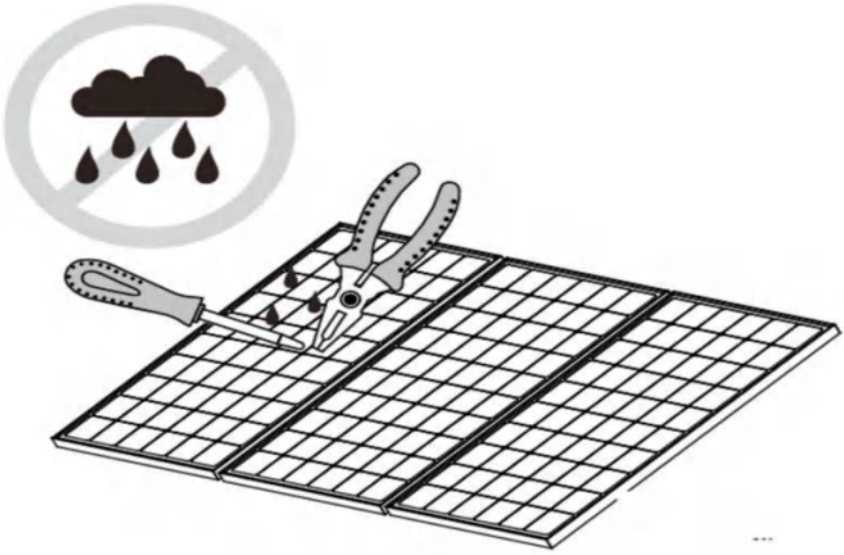

Installation of Solar Photovoltaic Modules

The module frame must be properly earthed. Removal on any one module must not interrupt the earthing of the remaining modules.

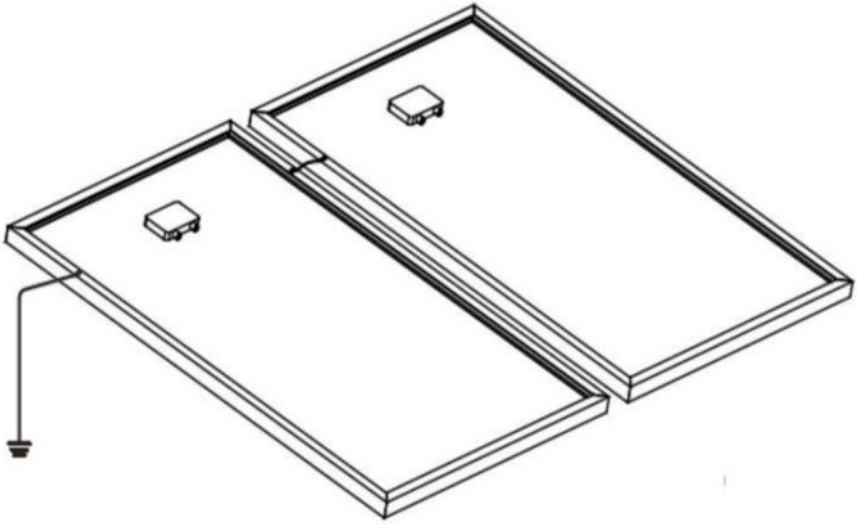

Solar Array Mechanical installation

Selecting an installation place:

- Select a suitable place for installation of the solar modules.
  The modules should not be shaded during the solar window part of the day.
- The module should be facing north in the southern latitudes for best power generation.
- An approved solar technician should be consulted to determine the best orientation of the solar panels.

Installation of Solar Photovoltaic Modules

Selecting the proper support frame:

- Always observe the instructions and safety precautions included with the support frame to be used with the modules.
- Never attempt to drill holes in the glass surface of the module. It will void the warranty.
- Do not drill additional mounting holes in the frame of the module. It will void the warranty.



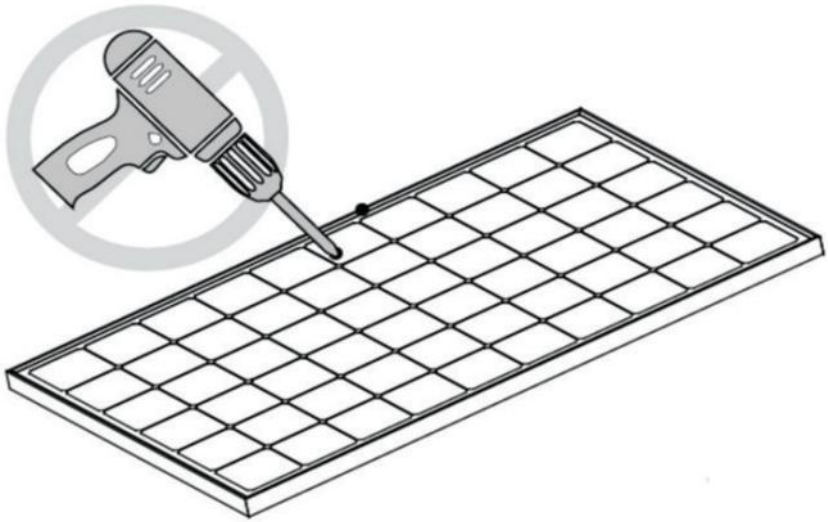

Installation of Solar Photovoltaic Modules

- Modules must be securely attached to the mounting structure using four mounting points for normal installation. If additional wind or snow loads are considered for the installation additional mounting points should also be used.
- The support frame must be made of durable, corrosion resistant and UV resistant material.
- The heat expansion and cold contraction of the support frame should have no effect on its busage and performance.

Ground mounting:

- Select the height of the mounting system to prevent the lowest edge of the module from being covered by snow in winter in areas the experience heavy snowfalls. In addition, assure the lowest portion of the module is placed high enough that it is not shaded by plants or trees and is free from the effects of sand and stone driven by wind.

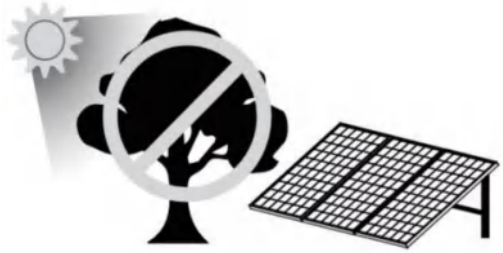

Roof Mounting:

- When installing the modules on a roof ensure that they are securely fastened and cannot fall because of wind or snow loads.
- When installing on a roof, ensure that the roof construction is suitable. In addition, any roof penetration required to mount the module must be properly sealed to prevent leaks.
- The roof installation of solar modules may affect the fireproofing of the house construction and it may be necessary to use an earth ground fault circuit breaker.

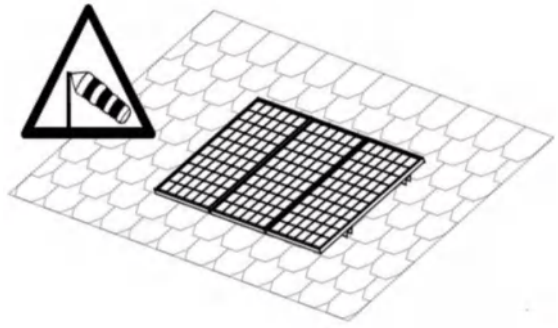

Installation of Solar Photovoltaic Modules

- **Provide adequate ventilation under a module for cooling.**
  50 mm minimum between the module and the mounting surface.

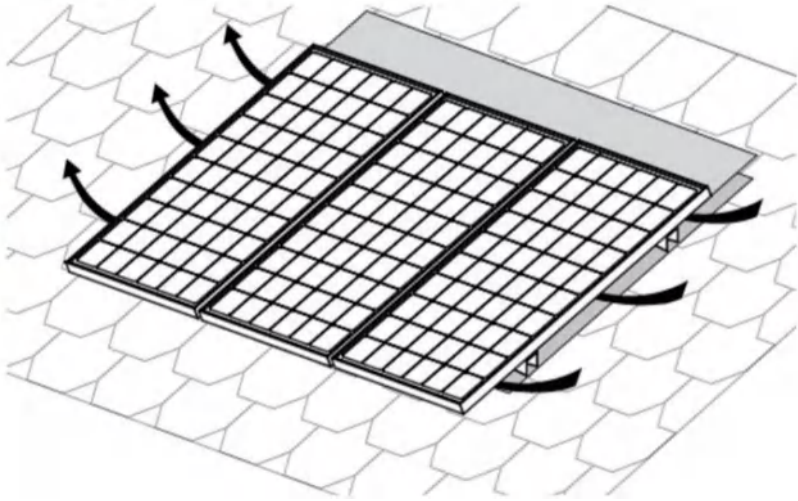

Pole mounting:

- **When installing the modules on a pole, choose a pole and module mounting structure that will withstand anticipated winds for the area. The pole must have a solid foundation.**

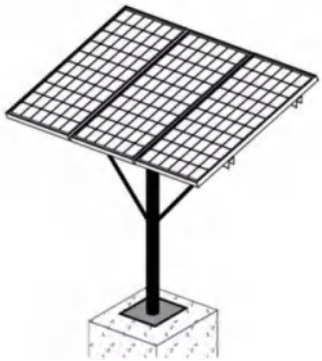

Installation of Solar Photovoltaic Modules

Solar Array Wiring

The array is formed of modules in series. The switch disconnector must be approved for disconnecting solar DC under load.

The MC-4 connectors must be approved and from the same manufacturer at each join.

Mismatching connectors can cause failure and possible fire.

General installation:

- Do not use modules of different configurations in the same system.
- The solar photovoltaic array consists of a maximum of 10 modules of 270 watts or 8 modules of 370 watts.
- The solar array total system voltage must not exceed table 8.1 DC open circuit. If installed in an area that experiences temperatures lower than 20 degrees C the Voltage open circuit will rise and a calculation must be done by a qualified technician.
- Both sides of an MC 4 type connection must be of the same type and manufacturer.
- Multistrand solar wire, having a minimum cross section of 2.5 sq mm or larger must be used.
- Cable installation must comply with all local and national codes and regulations.
- A switch disconnector rated for DC must be used between the array and the outdoor unit. If not adjacent to the array a separate switch must be installed at the array.

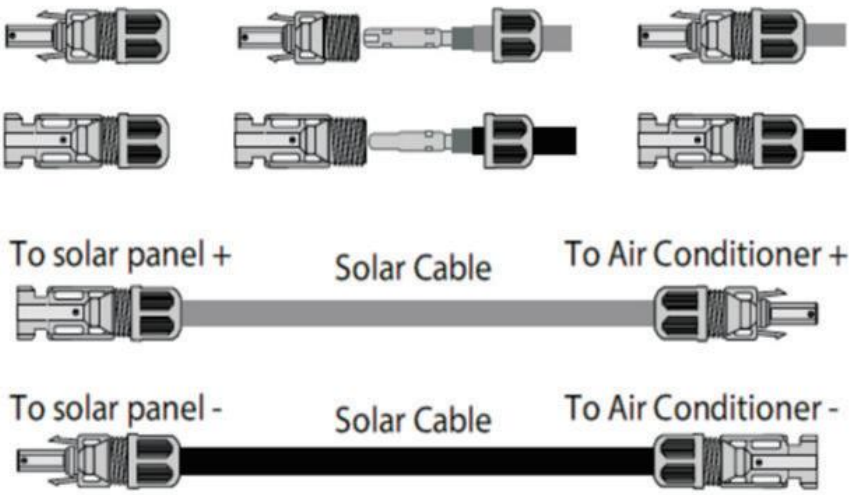

Installation of Solar Photovoltaic Modules

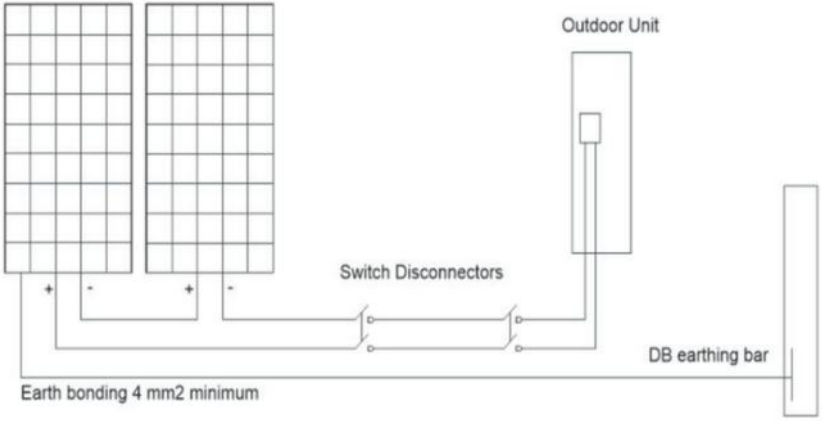

Earth Fault Protection Solar DC

Roof mounted DC PV arrays located on dwellings must be provided with
DC earth fault protection per US Electrical code NEC 2005 Article 690.5.
Earth fault protection isolates the Neutral conductor. (in DC this is usually the negative wire)
from earth when a ground fault occurs.

Solar Disclaimer

Because the use of this manual and conditions or methods of installation, operation,
use and maintenance of the photovoltaic (PV) product are beyond our control,
we do not take any responsibility and expressly disclaim liability for loss, damage,
or expense arising out of or in any way connected with such installation,
operation use or maintenance. Nor responsibility is assumed by us for any infringement of patents or other
rights of third parties, which may result by using the PV product. No license is granted by modification
or otherwise under any patent or patent rights.

The information in this manual is based on company knowledge and experience and is believed to
be reliable, but such information including product specification (without limitations) and
suggestions do not constitute a warranty, expressed or implied.

We reserve the right to change the manual, the PV product, the specifications, or product data
sheets without prior notice.

9. Electrical connect

BEFORE PERFORMING ELECTRICAL WORK, READ THESE REGULATIONS

1. All wiring must comply with local and national electrical codes, and must be installed by a licensed electrician.
2. All electrical connections must be made according to the Electrical Connection Diagram located on the panels of the indoor and outdoor units.
3. If there is a serious safety issue with the power supply, stop work immediately. Explain your reasoning to the client, and refuse to install the unit until the safety issue is properly resolved.
4. Power voltage should be within 90-110% of rated voltage.Insufficient power supply can cause a malfunction,electrical shock, or fire.
5. Circuit, including any switches, should have a capacity 1.5 times the maximum unit current (amps).
6. If connecting power to fixed wiring, the qualified technician must use an approved circuit breaker or switch that disconnects all poles and has a contact separation of at least 1/8 in (3mm). It must be incorporated into the fixed wiring.
7. Make sure to properly ground the air conditioner.
8. Every wire must be firmly connected. Loose wiring can cause the terminal to overheat, resulting in malfunction and possible fire.
9. If the unit has an auxiliary electric heater, it must be installed at least 40 in (1meter) away from any combustible materials.
10. To avoid getting an electric shock, never touch the electrical components soon after the power supply has been turned off. Always wait 10 minutes or more before touching the electrical components once the power has been turned off.
11. If connecting power to fixed wiring, a surge protector and main power switch should be installed.

⊘ DO NOT connect another appliance to the same circuit. Only connect the unit to an individual branch circuit outlet.

⊘ DO NOT let wires touch or rest against refrigerant tubing, the compressor, or any moving parts within the unit.

Indoor unit wiring nameplate

09-12k:

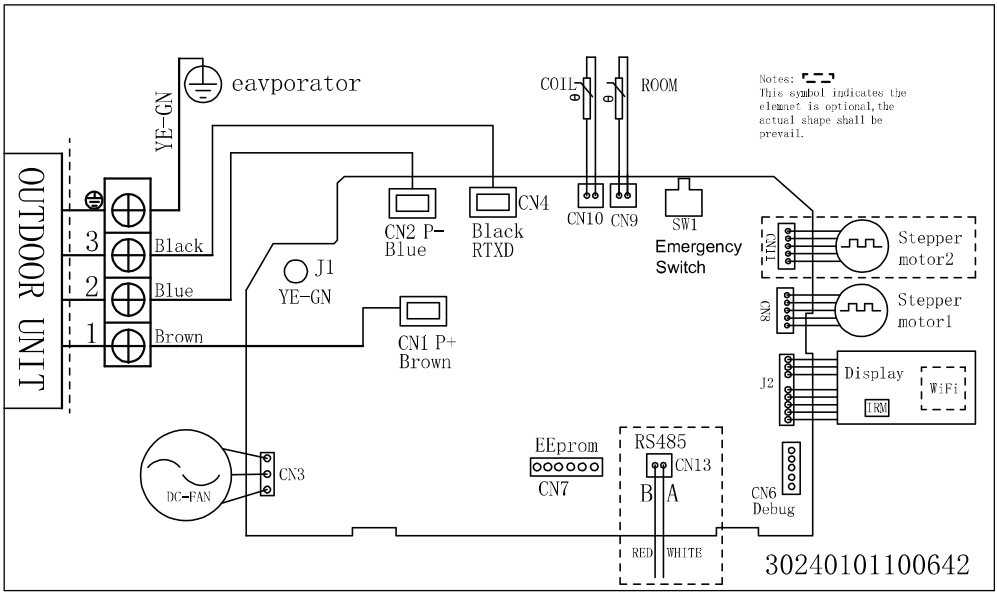

18-24k:

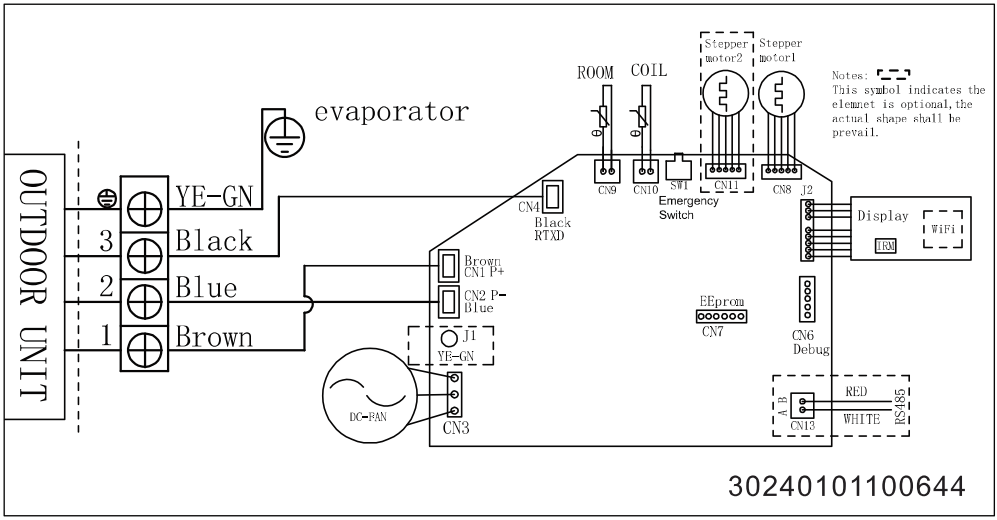

Outdoor unit wiring nameplate

27K:

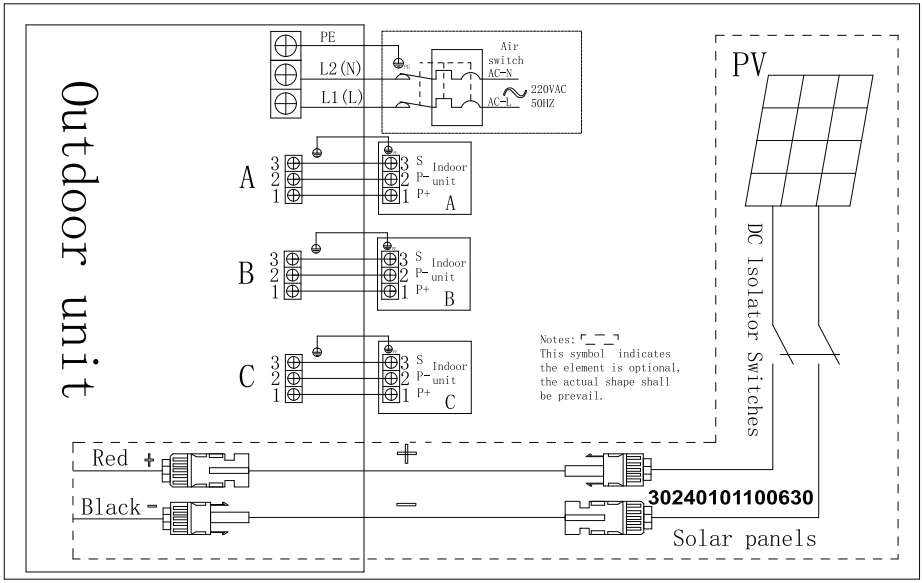

When the unit installed in the United States and under the power supply 208~240V , the power cable is connected to L1 or L2 terminals.In other cases, the power cable is connected to terminals L and N

36K:

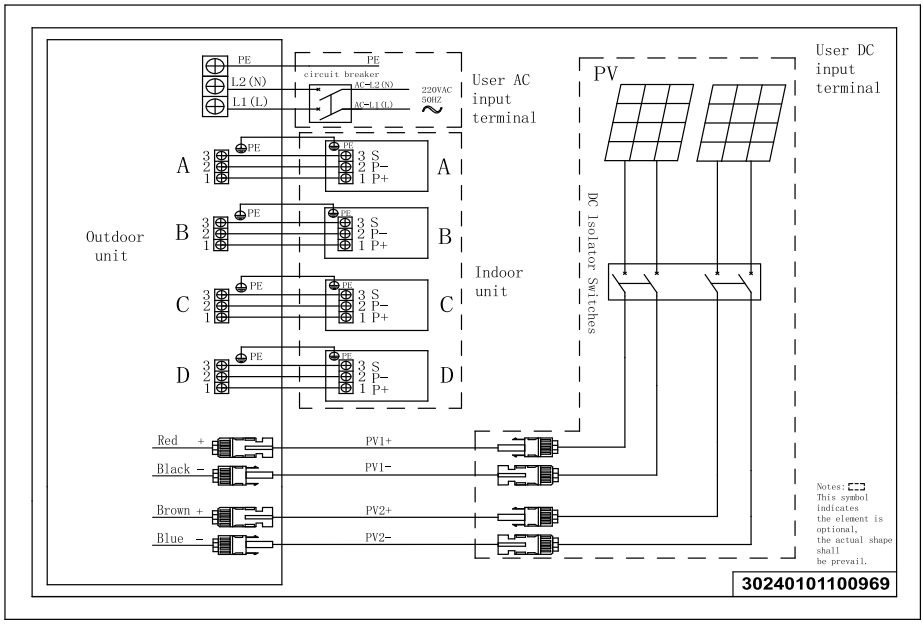

Electrical schematic diagram of outdoor unit

27K:

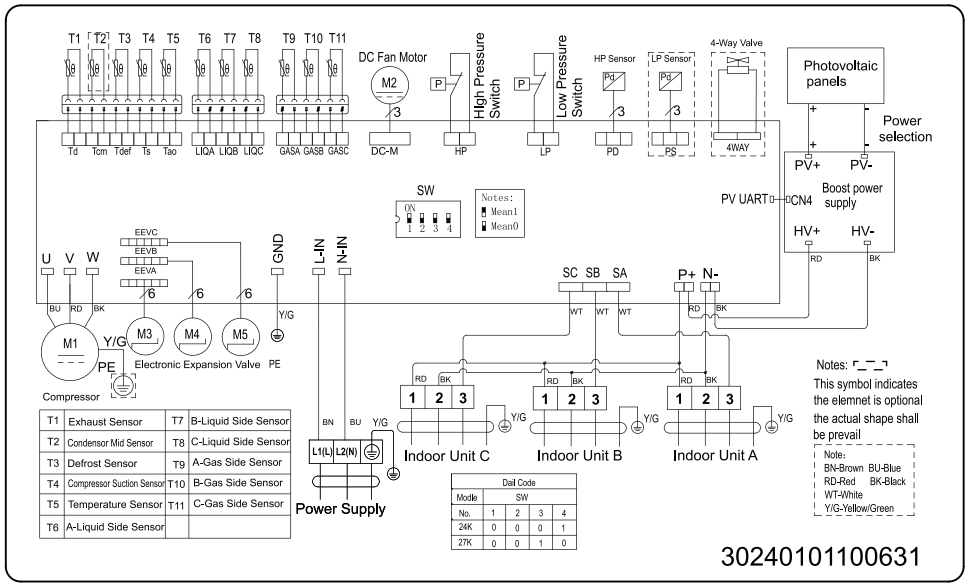

T1	Exhaust Sensor	T7	B-Liquid Side Sensor
T2	Condensor Mid Sensor	T8	C-Liquid Side Sensor
T3	Defrost Sensor	T9	A-Gas Side Sensor
T4	Compressor Suction Sensor	T10	B-Gas Side Sensor
T5	Temperature Sensor	T11	C-Gas Side Sensor
T6	A-Liquid Side Sensor		

Dail Code				
Modle	SW			
No.	1	2	3	4
24K	0	0	0	1
27K	0	0	1	0

30240101100631

36K:

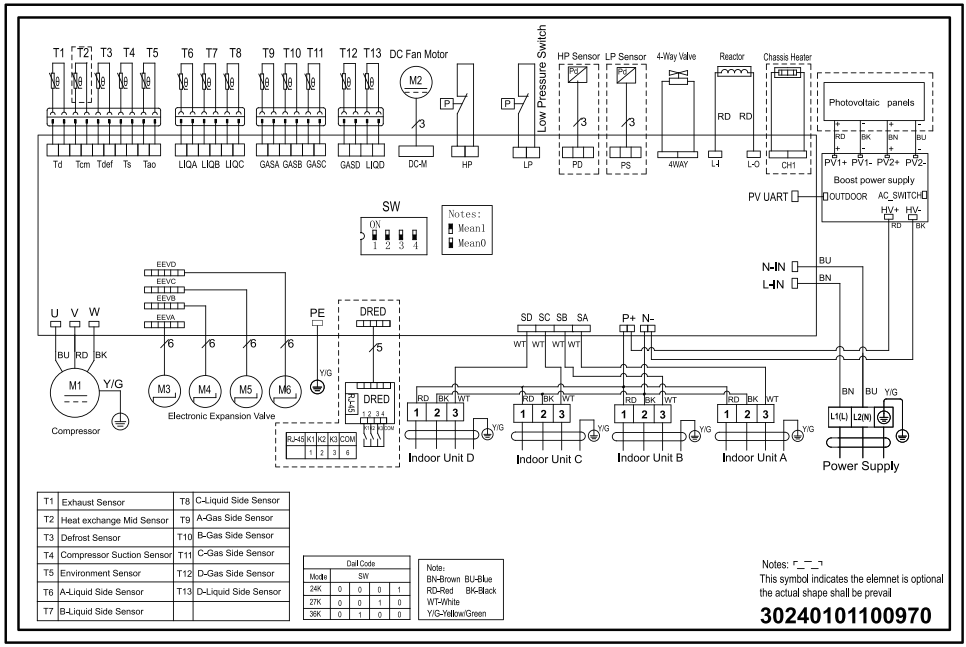

T1	Exhaust Sensor	T8	C-Liquid Side Sensor
T2	Heat exchange Mid Sensor	T9	A-Gas Side Sensor
T3	Defrost Sensor	T10	B-Gas Side Sensor
T4	Compressor Suction Sensor	T11	C-Gas Side Sensor
T5	Environment Sensor	T12	D-Gas Side Sensor
T6	A-Liquid Side Sensor	T13	D-Liquid Side Sensor
T7	B-Liquid Side Sensor		

Dail Code				
Modle	SW			
24K	0	0	0	1
27K	0	0	1	0
36K	0	1	0	0

30240101100970

10.Electrical and Gas Leak Checks

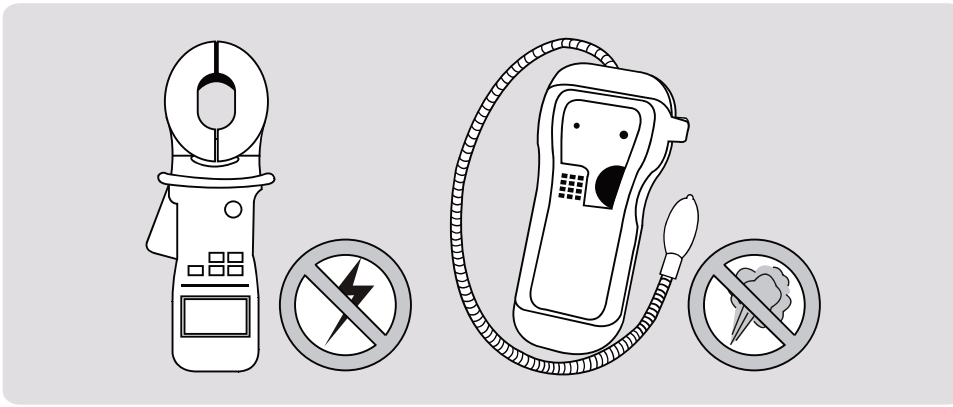

Electrical Safety Checks

After installation, confirm that all electrical wiring is installed in accordance with local and national regulations, and according to the Installation Manual.

BEFORE TEST RUN

Check Grounding Work

Measure grounding resistance by visual detection and with grounding resistance tester. Grounding resistance must be less than 4.

DURING TEST RUN

Check for Electrical Leakage

During the Test Run, use an electro-probe and multimeter to perform a comprehensive electrical leakage test.

If electrical leakage is detected, turn o ffthe unit immediately and call a licensed electrician to find and resolve the cause of the leakage.

⚠ ELECTRIC SHOCK

ALL WIRING MUST COMPLY WITH LOCAL AND NATIONAL ELECTRICAL CODES, AND MUST BE INSTALLED BY A LICENSED ELECTRICIAN.

Gas Leak Cheaks

There are two different methods to check for gaseous leaks.

Soap and Water Method

Using a soft brush, apply soapy water or liquid detergent to all pipe connection points on the indoor unit and outdoor unit. The presence of bubbles indicates a leak.

Leak Detector Method

If using leak detector, refer to the device's operation manual for proper usage instructions.

AFTER PERFORMING GAS LEAK CHECKS

After confirming that the all pipe connection points DO NOT leak, replace the valve cover on the outside unit.

11.Test Run

Before Test Run

Only perform test run after you have completed the following steps:

- Electrical Safety Checks – Confirm that the electrical system is safe and operating properly
- Gas Leak Checks – Check all flare nut connections and confirm that the system is not leaking
- Confirm that gas and liquid (high and low pressure) valves are fully open

Test Run Instructions

You should perform the Test Run for at least 30 minutes.

1. Connect power to the unit.
2. Press the ON/OFF button on the remote controller to turn it on.
3. Press the MODE button to scroll through the following functions, one at a time:
   - COOL – Select lowest possible temperature
   - HEAT – Select highest possible temperature
4. Let each function run for 5 minutes, and perform each of the checks listed in the table to the right:

List of Checks to Perform	PASS/FAIL	
No electrical leakage		
Unit is properly grounded		
All electrical terminals properly covered		
Indoor and outdoor units are solidly installed		
All pipe connection points do not leak	Outdoor (2):	Indoor (2):
Water drains properly from drain hose		
All piping is properly insulated		
Unit performs COOL function properly		
Unit performs HEAT function properly		
Indoor unit louvers rotate properly		
Indoor unit responds to remote control		

Test Run

DOUBLE-CHECK PIPE CONNECTIONS

During operation, the pressure of the refrigerant circuit will increase. This may reveal leaks that were not present during your initial leak check. Take time during the Test Run to double-check that all refrigerant pipe connection points do not have leaks. Refer to Gas Leak Check section for instructions.

5. After the Test Run is successfully complete, and you confirm all check points in List of Checks to Perform have PASSED, do the following:

   a. Using remote control, return unit to normal operating temperature.

   b. Using insulation tape, wrap the indoor refrigerant pipe connections that you left uncovered during the indoor unit installation process.

IF AMBIENT TEMPERATURE IS BELOW 60.8°F (16°C)

You cannot use the remote controller to turn on the COOL function when the ambient temperature is below 60.8°F. In this instance, you can use the MANUAL CONTROL button to test the COOL function.

1. Lift the front panel of the indoor unit, and raise it until it clicks in place.

2. The MANUAL CONTROL button is located on the right-hand side of the unit. Press it 2 times to select the COOL function.

3. Perform Test Run as normal.

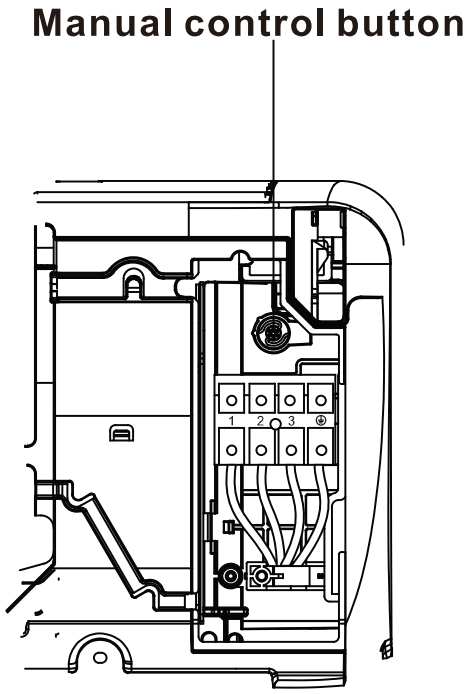

12.Operation

The air conditioner has an infrared remote and an android or I phone app.

Remote control operation

Some functions may not be available in all units.

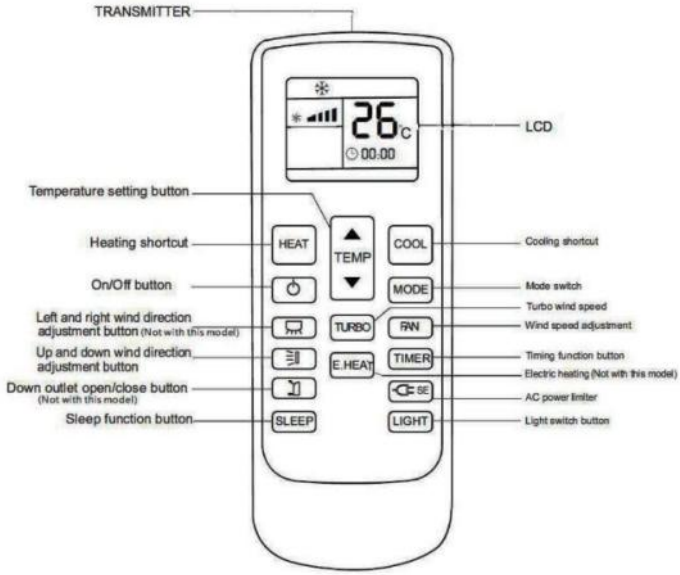

● "⏻" button	Press the " ⏻ " button to switch the air conditioner
● "Mode" button	Press the "Mode" button and select the "Auto/Cooling/ Dehumidifying/Air Supply/Heating" mode.
● "COOL" button	This button is used to set the air conditioner to enter the cooling mode, and the set temperature is 26°Crun. 1. When the air conditioner is on or off, just press the button, the air conditioner will enter cooling Mode and set the temperature to 26°C. 2. In the timing on state, press this button to cancel the timing on setting and turn on in advance.Run cooling mode, set temperature to 26°C. 3.In sleep state, press this button to run the cooling mode, set the temperature to 26°C.
● "HEAT" button	This button is used to set the air conditioner into heating mode, and

	set the temperature to 24℃run. 1. When it is turned on or off, as long as you press this button, the air conditioner will enter the heating mode And the set temperature is 24℃ for operation. 2. In the timing on state, press this button to cancel the timing on setting and turn on in advance.Run heating mode, set temperature to 24℃. 3.In sleep state, press this key to run heating mode, and set temperature to 24℃
●"TEMP" button	In cooling, heating, and dehumidification modes, press the "▲","▼" keys to adjust the temperature degree, range 16-32℃ Note: The temperature is not adjustable in the air supply mode.
■ "FAN" button	Press the "Wind Speed" button to select the wind speed of "Breeze/Low Wind/Mid Low Wind/Stroke/High Wind/Auto". Note: There is no automatic wind speed in air supply mode.
● "eSE" button	When connected to the mains, press the " " button, the one-key power saving logo of the indoor unit will turn green, and enter Power saving mode.

Android or I phone app

Android or I phone app

1. The indoor unit has a QR code that can be scanned to download the app.



Download the app and register your phone number.

2. Turn the Solar air conditioner on, use the remote control and press the "LIGHT"

button 8 times or more withing 10 seconds. When you hear “Di” the wifi indicator should be flashing.



3. Turn the Bluetooth on your phone on and connect to the home WIFI.
4. Open the Solar Aircon app on and it should automatically detect the Solar air conditioner. Confirm the device, enter the home WIFI password and start the connection.

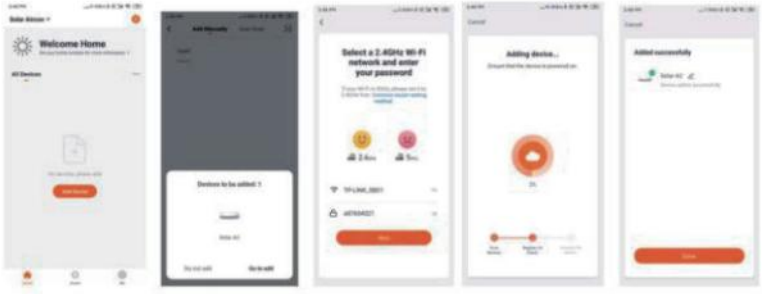

5. Use the app to control the air conditioner anywhere via WiFi. Observe the power saving data and view the power consumption by hour/day/month/year.

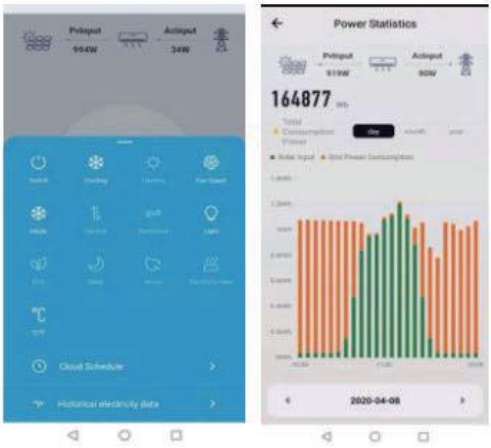

Warning disassembly of the units can result in an electric shock hazard. This

unit employs multiple sources of supply and care must be taken that all supplies are turned off and energy storage devices disconnected

Common Issues. Please check the following before contacting a repair company.

Issue	Possible Causes
Unit does not turn on when pressing the on off button	The Unit has a 3-minute protection feature that prevents the unit from overloading. The unit will not restart within three minutes of being turned off.
	Conflict with the startup mode of the first indoor unit
The unit changes From COOL/HEAT mode to FAN mode	The unit may change its setting to prevent frost from forming on the unit. Once the temperature increases, the unit will start operating in the previously selected mode again.
	The set temperature has been reached, at which point the unit turns off the compressor. The unit will continue operating when the temperature fluctuates again.
The indoor unit emits white mist	In humid regions, a large temperature difference between the room's air and the conditioned air can cause white mist.
Both the indoor and outdoor units emit white mist	When the unit restarts in HEAT mode after defrosting, white mist may be emitted due to moisture generated from the defrosting process.
The indoor unit makes noises	A rushing air sound may occur when the louver resets its position.
	A squeaking sound may occur after running the unit in HEAT mode due to expansion and contraction of the unit's plastic parts.
Both the indoor unit and outdoor unit make noises	Low hissing sound during operation: This is normal and is caused by refrigerant gas flowing through both indoor and outdoor units.
	Low hissing sound when the system starts has just stopped running, or is defrosting: This noise is normal and is caused by the refrigerant gas stopping or changing direction.
	Squeaking sound: Normal expansion and contraction of plastic and metal parts caused by temperature changes during operation can cause squeaking noises.
The outdoor unit makes noises	The unit will make different sounds based on its current operating mode.
Dust is emitted from either the indoor or outdoor unit	The unit may accumulate dust during extended periods of non-use, which will be emitted when the unit is turned on This can be mitigated by covering the unit during long periods of inactivity.

The unit emits a bad odour	The unit may absorb odour from the environment(such as furniture, cooking, cigarettes, etc.) which will be emitted during operations.
	The unit's filters have become mouldy and should be cleaned.
The fan of the outdoor unit does not operate	During operation, the fan speed is controlled to optimize product operation.
Operation is erratic, unpredictable, or unit is unresponsive	Interference from cell phone towers and remote boosters may cause the unit to malfunction. In this case, try the following: ● Disconnect the power, then reconnect. ● Press ON/OFF button on remote control to restart operation.

Problem	Possible Causes	Solution
Poor Cooling Performance	Temperature setting may be higher than ambient room temperature	Lower the temperature setting
	The heat exchanger on the indoor or outdoor unit is dirty	Clean the affected heat exchanger
	The air filter is dirty	Remove the filter and clean it according to instructions
	The air inlet or outlet of either unit is blocked	Turn the unit off, remove the obstruction and turn it back on
	Doors and windows are open	Make sure that all doors and windows are closed while operating the unit
	Excessive heat is generated by sunlight	Close windows and curtains during periods of high heat or bright sunshine
	Too many sources of heat in the room (people, computers, electronics, etc.)	Reduce amount of heat sources
	SLEEP function is activated	SLEEP function can lower product performance by reducing operating frequency. Turn off SLEEP function.
	Solar power is not enough. grid power is off, air conditioner runs only on solar panels.	Turn on the grid power.

The unit is not working	Both solar and gird power is off	Turn on gird and solar power
	Remote control batteries are dead	Replace batteries
	Timer is activated	Turn timer off
Poor heating performance	The outdoor temperature is lower than 7℃（44.5℉）	Use auxiliary heating device
	Cold air is entering through doors and windows	Make sure that all doors and windows are closed during use
Error code appears in the window display of indoor unit: ·E0,E1,E2... ·P1,P2,P3... ·F1,F2,F3... Lo/Lp	The unit may stop operation or continue to run safely.If the indicator light continues to display an error code, wait for about10minutes. The problem may resolve itself. If not, disconnect both solar and grid power, then connect it again 2 minutes later. Turn the unit on. If the problem persists, tun off the unit and contact an authorized service centre	

30240301005098